Self Diagnosis Supported model

SERVICE MANUAL

LE-4A CHASSIS

MODEL	COMMANDER	DEST	CHASSIS NO.	MODEL	COMMANDER	DEST	CHASSIS NO.
KF-50SX300	RM-906	AEP	SCC-R01A-A	KF-60SX300	RM-906	AEP	SCC-R01B-A
KF-50SX300K	RM-906	OIRT	SCC-R03A-A	KF-60SX300K	RM-906	OIRT	SCC-R03B-A
KF-50SX300U	RM-906	UK	SCC-R02B-A	KF-60SX300U	RM-906	UK	SCC-R02A-A

KF-50/60SX300

RM-906

LCD PROJECTION TV

SONY®

TABLE OF CONTENTS

Section	Title	Page
	Caution	3
	Specifications	4
	Connectors	5
1.	**SELF DIAGNOSIS FUNCTION**	
	LE-4A Self Diagnostic Software	6
2.	**GENERAL**	7
3.	**DISASSEMBLY**	
3-1.	Rear Cover Removal	21
3-2.	Centre Pillar Removal	21
3-3.	Service Position	21
3-4.	Chassis, Optical Unit, DC Fan Removal	21
3-5.	Power Block Removal	22
3-6.	H1 Board Removal	22
3-7.	H2 Board Removal	22
3-8.	H3 Board Removal	22
3-9.	A Board Removal	23
3-10.	G Board Removal	23
3-11.	T Board Removal	23
3-12.	Front Panel Removal	23
3-13.	Front Cover Removal	24
3-14.	Control Panel Removal	24
3-15.	Screen, Mirror Block Assembly Removal	24
3-16.	Mirror Cover Block Assembly Removal	25
3-17.	Contrast Screen, Diffusion Plate Removal	25
3-18.	Woofer Block Assembly Removal	26
3-19.	Speaker Removal	26
3-20.	Mirror Removal	26
4.	**ELECTRICAL ADJUSTMENTS**	
4-1.	Adjustments with Commander	27
4-1-1.	How to Select Each Mode	27
4-1-2.	Programming the Remote Commander for Operation in Service Mode	27
4-1-3.	Setting the TV into Service Mode	27
4-1-4.	Screen Display for Service Menu	27
4-1-5.	Operation Method for Adjustments	29
4-2.	Screen Centre Adjustment	29
4-3.	Test Test Mode	29
5.	**DIAGRAMS**	
5-1.	Block Diagram (1)	31
	Block Diagram (2)	32
	Block Diagram (3)	33
	Block Diagram (4)	34
5-2.	Circuit Boards Location	34
5-3.	Schematic Diagrams and Printed Wiring Boards	34
	A Board Schematic Diagram	35
	A Printed Wiring Board	38
	B Board Schematic Diagram	39
	B Printed Wiring Board	42
	C Board Schematic Diagram	43
	C Printed Wiring Board	47
	J Board Schematic Diagram	49
	J Printed Wiring Board	50
	G Board Schematic Diagram	51
	G Printed Wiring Board	52
	H1 Schematic Diagram	53
	H1 Printed Wiring Board	52
	H2 Board Schematic Diagram	53
	H2 Printed Wiring Board	52
	H3 Board Schematic Diagram	53
	H3 Printed Wiring Board	52
	T Board Schematic Diagram	53
	T Printed Wiring Board	52
5-4.	Semiconductors	54
5-5.	IC Block Diagrams	56
6.	**EXPLODED VIEWS**	
6-1.	Screen and Cover Block	58
6-2.	Cabinet Block	59
6-3.	Main Bracket Block	60
6-4.	Picture Tube Block	61
7.	**ELECTRICAL PARTS LIST**	62

WARNING !!

AN ISOLATION TRANSFORMER SHOULD BE USED DURING ANY SERVICE WORK TO AVOID POSSIBLE SHOCK HAZARD DUE TO LIVE CHASSIS, THE CHASSIS OF THIS RECEIVER IS DIRECTLY CONNECTED TO THE POWER LINE.

SAFETY-RELATED COMPONENT WARNING !!

COMPONENTS IDENTIFIED BY SHADING AND MARKED ⚠ ON THE SCHEMATIC DIAGRAMS, EXPLODED VIEWS AND IN THE PARTS LIST ARE CRITICAL FOR SAFE OPERATION. REPLACE THESE COMPONENTS WITH SONY PARTS WHOSE PART NUMBERS APPEAR AS SHOWN IN THIS MANUAL OR IN SUPPLEMENTS PUBLISHED BY SONY.

CAUTION

Lead Free Soldered Boards

The circuit boards listed below [Table 1] used in these models may have been processed using Lead Free Solder. The boards are identified by the LF logo located close to the board designation e.g. F1, H1 etc [see examples]. The servicing of these boards requires special precautions to be taken as outlined below.

example 1

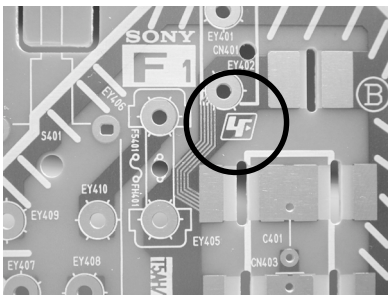

example 2

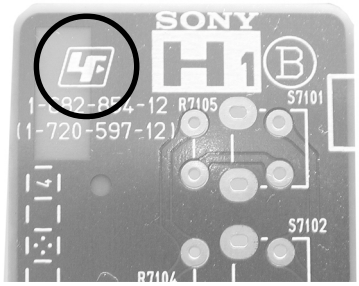

Table 1

Board	Function
A	Tuner, Audio, Regulators
B	Micro, 3D Comb
C	Scanrate, Backend, Digital Gamma, LCD Drivers
G	Power Supply
H1	User Key, Sircs
H2	LED Indicators
H3	AV Input, HP Out
J	A/V Switch
T	Lamp Cover Switch

It is strongly recommended to use Lead Free Solder material in order to guarantee optimal quality of new solder joints. Lead Free Solder is available under the following part numbers :

Partnumber	Diameter	Remarks
7-640-005-19	0.3mm	0.25Kg
7-640-005-20	0.4mm	0.50Kg
7-640-005-21	0.5mm	0.50Kg
7-640-005-22	0.6mm	0.25Kg
7-640-005-23	0.8mm	1.00Kg
7-640-005-24	1.0mm	1.00Kg
7-640-005-25	1.2mm	1.00Kg
7-640-005-26	1.6mm	1.00Kg

Due to the higher melting point of Lead Free Solder the soldering iron tip temperature needs to be set to 370 degrees centigrade. This requires soldering equipment capable of accurate temperature control coupled with a good heat recovery characteristics.

For more information on the use of Lead Free Solder, please refer to *http://www.sony-training.com*

ITEM MODEL	Television System	Stereo System	Channel Coverage	Color System
AEP	B/G/H, D/K, I, L	GERMAN/NICAM Stereo	VHF : E02-12 UHF : E21-69 CABLE TV : S1-S20 HYPER : S21-S41 D/K: R1-12, R21-69 L: F02-10 , B-Q , F21-F69 I: B21-69 I: B21-69	PAL, SECAM NTSC3.58, NTSC4.43 (VIDEO IN)
OIRT	B/G/H, D/K	GERMAN/NICAM Stereo	VHF : E02-12 UHF : E21-69 CABLE TV : S1-S20 HYPER : S21-S41 D/K: R1-12, R21-69	PAL, SECAM NTSC3.58, NTSC4.43 (VIDEO IN)
UK	I	NICAM Stereo	UHF : B21-B69	PAL, SECAM NTSC3.58, NTSC4.43 (VIDEO IN)

Projected Picture Size	Approx 127 cm (50 inches) (Approx 127 cm picture measured diagonally) KF-50SX300 Approx 153 cm (60 inches) (Approx 153 cm picture measured diagonally) KF-60SX300	**Sound Output**	
		Right and Left speaker	2x20W (Music Power) 2x10W (RMS)
		Subwoofer	1x30W (Music Power) 1x15W (RMS)
Input/Output Terminals [REAR]		**General Specifications**	
1: 21-pin Euro connector (CENELEC standard)	Inputs for Audio and Video signals. Inputs for RGB. Outputs of TV Video and Audio signals.	Power Requirements	220 - 240V
		Power Consumption/ Standby	Approx 210W/<1W (KF-50SX300) Approx 210W/<1W (KF-60SX300)
2: 21-pin Euro connector (CENELEC standard)	Inputs for Audio and Video signals. Inputs for RGB. Outputs of Monitor Video and Audio signals.	Dimensions	Approx 1376 x 923 x 442MM (KF-50SX300) Approx 1618 x 1062 x 542mm (KF-60SX300)
3: 21-pin Euro connector (CENELEC standard)	Inputs for Audio and Video signals. Inputs for S Video. Outputs for Video and Audio signals (selectable). Smartlink interface.	Weight	Approx 37.5kg (KF-50SX300) Approx 48.5kg (KF-60SX300)
Phono Jacks	Output Connectors variable for Audio Signals.	Supplied Accessories	RM-906 Remote Commander (1) IEC designated R6 battery (2)
Minijack	Input for PC Audio.	Other Features	Digital Comb Filter, Teletext, NextView, PAP, Smartlink,Virtual Dolby, Digital BBE, NICAM, ACI, TV system autodetection.
D type connector	PC input.		
Input/Output Terminals [FRONT]		**Remote control system : Infrared control**	
Headphone jack	stereo mini jack	Power requirements	3V dc 2 batteries IEC designation LR03 (size AAA)
Audio inputs	phono jacks		
Video inputs	phono jacks		
S Video input	4 pin DIN		
Design and specifications are subject to change without notice.			

Model Name Item	KF-50/60SX300AEP	KF-50/60SX300K	KF-50/60SX300U
Pal Comb	ON	ON	ON
PAP	ON	ON	ON
RGB Priority	ON	ON	ON
Woofer Box	ON	ON	ON
Scart 1	ON	ON	ON
Scart 2	ON	ON	ON
Scart 3	ON	ON	ON
Front in (4)	ON	ON	ON
Projector	ON	ON	ON
Norm B/G	ON	ON	OFF
Norm I	ON	OFF	ON
Norm D/K	ON	ON	OFF
Norm AUS	OFF	OFF	OFF
Norm L	ON	OFF	OFF
Norm SAT	OFF	OFF	OFF
Norm M	OFF	OFF	OFF
Teletext	ON	ON	ON
Nicam	ON	ON	ON

WARNING (UK Models only)

The flexible mains lead is supplied connected to a **B.S. 1363** fused plug having a fuse of **5 AMP** rating. Should the fuse need to be replaced, use a **5AMP FUSE** approved by ASTA to **BS 1362**, ie one that carries the ASTA mark.

IF THE PLUG SUPPLIED WITH THIS APPLIANCE IS NOT SUITABLE FOR THE OUTLET SOCKETS IN YOUR HOME, IT SHOULD BE CUT OFF AND AN APPROPRIATE PLUG FITTED. THE PLUG SEVERED FROM THE MAINS LEAD MUST BE DESTROYED AS A PLUG WITH BARED WIRES IS DANGEROUS IF ENGAGED IN A LIVE SOCKET.

When an alternative type of plug is used, it should be fitted with a **5 AMP FUSE**, otherwise the circuit should be protected by a **5AMP FUSE** at the distribution board.

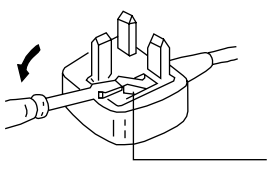

How to replace the fuse.
Open the fuse compartment with a screwdriver blade and replace the fuse.

21 pin connector

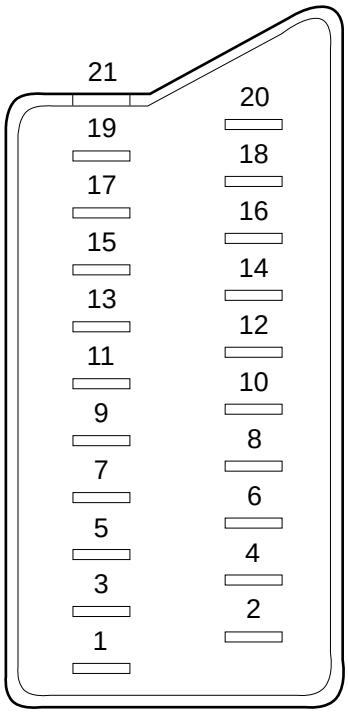

Pin No	1	2	3	Signal	Signal level
1	○	○	○	Audio output B (right)	Standard level : 0.5V rms Output impedence : Less than 1kohm*
2	○	○	○	Audio input B (right)	Standard level : 0.5V rms Output impedence : More than 10kohm*
3	○	○	○	Audio output A (left)	Standard level : 0.5V rms Output impedence : Less than 1kohm*
4	○	○	○	Ground (audio)	
5	○	○	○	Ground (blue)	
6	○	○	○	Audio input A (left)	Standard level : 0.5V rms Output impedence : More than 10kohm*
7	○	●	●	Blue input	0.7 +/- 3dB, 75 ohms positive
8	○	○	○	Function select (AV control)	High state (9.5-12V) : Part mode Low state (0-2V) : TV mode Input impedence : More than 10K ohms Input capacitance : Less than 2nF
9	○	○	○	Ground (green)	
10	○	○	○	Open	
11	○	●	●	Green	Green signal : 0.7 +/- 3dB, 75 ohms, positive
12	○	○	○	Open	
13	○	○	○	Ground (red)	
14	○	○	○	Ground (blanking)	
15	○	–	–	Red input	0.7 +/- 3dB, 75 ohms, positive
	–	○	○	(S signal Chroma input)	0.3 +/- 3dB, 75 ohms, positive
16	○	●	●	Blanking input (Ys signal)	High state (1-3V) Low state (0-0.4V) Input impedence : 75 ohms
17	○	○	○	Ground (video output)	
18	○	○	○	Ground (video input)	
19	○	○	○	Video output	1V +/- 3dB, 75ohms, positive sync 0.3V (-3+10dB)
20	○	–	–	Video input	1V +/- 3dB, 75ohms, positive sync 0.3V (-3+10dB)
	–	○	○	Video input Y (S signal)	1V +/- 3dB, 75ohms, positive sync 0.3V (-3+10dB)
21	○	○	○	Common ground (plug, shield)	

○ Connected ● Not Connected (open) * at 20Hz - 20kHz

Rear Connection Panel

Front Connection Panel

S-Video socket

S Video socket pin configuration		
Pin No	**Signal**	**Signal Level**
1	Ground	-
2	Ground	-
3	Y (S signal) input	1V+/- 3dB 75ohm, positive Sync. 0.3V -3 +10dB
4	C (S signal) input	0.3V+/- 3dB 75ohm, positive Sync.

SECTION 1 SELF DIAGNOSIS FUNCTION

LE-4A Self Diagnostic Software

The identification of errors within the LE-4A chassis is triggered in one of two ways :- 1: Busy or 2: Device failure to respond to IIC. In the event of one of these situations arising the software will first try to release the bus if busy (Failure to do so will report with a continuous flashing LED) and then communicate with each device in turn to establish if a device is faulty. If a device is found to be faulty the relevant device number will be displayed through the LED (Series of flashes which must be counted) See table 1, non fatal errors are reported using this method. Each time the software detects an error it is stored within the NVM. See Table 2.

Table 1

Error Message	LED Code
Lamp Cov	02
Lamp Prot	03
Fan Prot	04
Temp Prot	05
IIC	06
NVM	07
Tuner	09
Sound	10
Scanrate	12
Backend	14
AVSwitch	17
Digital Gamma	22
LCD Drivers	23
Speaker Prot	24

Flash Timing Example : e.g. error number 3

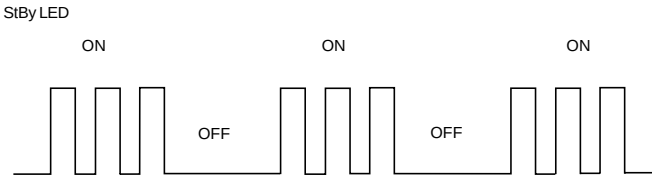

How to enter into Table 2

1. Turn on the main power switch of the TV set.
2. Program Remote Commander for Operation in Service Mode. [See Page 27].
3. Press 'VIDEO' 'VIDEO' > 'MENU' on the Remote Commander.
4. Using the Remote Commander, Scroll to the 'Error Menu' item using the down arrow key, then press the right arrow key.
5. The following table will be displayed indicating the error count.

Table 2

Error monitor		
WORKING TIME:	**(Hours:Minutes)**	82:33
Error counters:		
E02: LAMP COV		45
E03: LAMP PROT		8
E04: FAN PROT		55
E05: TEMP PROT		0
E06: IIC		0
E07: NVM		0
E09: TUNER		2
E10: SOUND		0
E12: SCANRATE		4
E14: BACKEND		2
E17: AVSWITCH		10
E22: DIGITAL GAMMA		3
E23: LCD Drivers		6
E24: SPEAKER PROT		0
Select: ▲ ▼	Previous Menu: ◀	

Note: To clear the error count data press '80' on the Remote commander.

The operating instructions mentioned here are partial abstracts from the Operating Instruction Manual. The page numbers of the Operating Instruction Manual remain as in the manual.

Checking the Accessories supplied

1 Remote control (RM-906)

2 Batteries (AAA size)

2 Brackets

1 Hexagon key

1 PC input cable

2 Screws

1 Cleaning cloth

Inserting Batteries into the Remote Control

⚠ Make sure you insert the supplied batteries using the correct polarities.
Always remember to dispose of used batteries in an environmental friendly way.

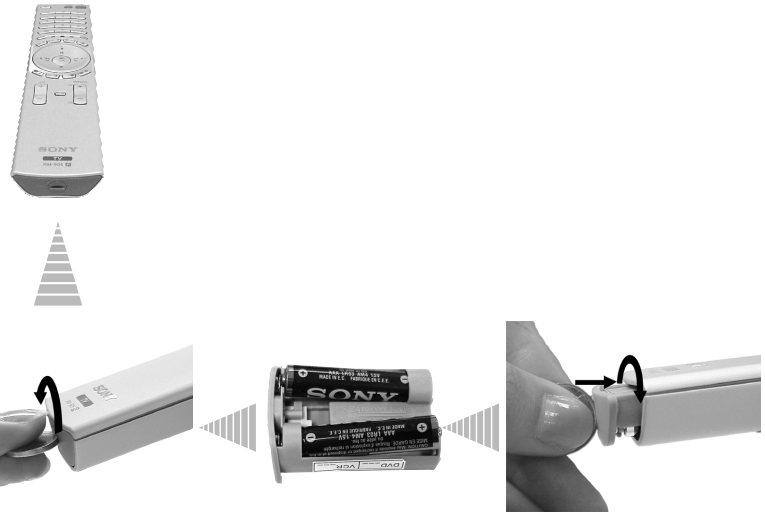

Overview of Remote Control Buttons

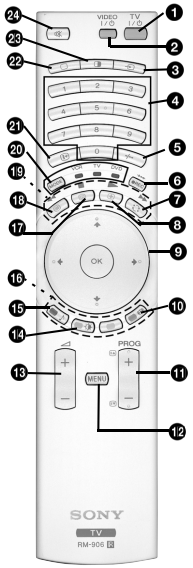

❶ **TV I/⏻ : To Temporarily Switch Off TV (standby mode):**
Press this button to temporarily switch off TV (the standby indicator ⏻ on the TV lights up). Press again to switch on TV from standby mode.

⚠
- To save energy we recommend switching off completely when TV is not in use.
- After 15 minutes without TV signal and without any button being pressed, the TV switches automatically into standby mode.

❷ **VCR or DVD on/off:** press this button to switch your VCR or DVD on or off.

❸ **Selecting input source:** press this button repeatedly until the desired input symbol of the source appears on the TV screen. Refer to page 25.

❹ **Selecting broadcast channels:** if Media Selector (⓴ is switched to TV, press these buttons to select channels. For double-digit programme numbers, enter the second digit within 2.5 seconds.

❺ **Selecting VCR double-digit:** if Media Selector (⓴) is switched to VCR, press this button to select double-digit channels for Sony's VCR e.g. 23, press -/-- first and next the buttons 2 and 3.

❻ **a) Recording button:**
If Media Selector (⓴) is switched to VCR, press this button to record programmes.

b) Resetting to factory set levels:
Press, for a minimum of 3 seconds, to return the picture and sound settings to the factory default levels. This will also return the set to the install condition and the "Auto Tuning" menu will appear on the screen. If this is the case refer to the section "Switching on the TV set and automatically Tuning" (page 11, step 5) of this manual.

❼ **Watching last channel selected:** if Media Selector (⓴) is switched to TV, press this button to return to the previous channel you were watching (provided you watched it for at least 5 seconds).

❽ **Freezing a teletext page:** in teletext mode, press this button to freeze a teletext page. Press it again to cancel the freeze.

❾ **a) Displaying a channel index:** if Media Selector (⓴) is switched to TV and MENU is switched off, press **OK** to display a channel overview. If you want to select a channel, press ⬇ or ⬆ next press again the **OK** button to watch the selected channel.

b) Navigator: if Media Selector (⓴) is switched to TV and MENU (⓬) is switched on, use these buttons to navigate through the menu system of the TV. Refer to page 12.

❿ **Selecting the screen format:** press this button repeatedly to change the format of the screen. Refer to page 16.

⓫ **Selecting broadcast channels:** press these buttons to select the next or previous broadcast channel.

⓬ **Menu system:** press this button to enter the TV menu system. Refer to page 12.

⓭ **Adjusting volume:** press these buttons to increase or decrease the audio volume.

⓮ **Selecting picture mode:** press this button repeatedly to change the picture mode. For details on the different picture modes. Refer to page 13.

⓯ **Selecting the sound effect:** Press this button repeatedly to change the sound effect. For details on different sound effects. Refer to page 14.

⓰ **Fastext:** In Teletext mode, these buttons can be used as Fastext buttons. For details see page 22.

⓱ **NexTView:** press this button to display NexTView. For details. Refer to page 23.

⓲ **Teletext:** press this button to switch on Teletext. For details see page 22.

⓳ **Operating VCR or DVD:** if Media Selector (⓴) is switched to VCR or DVD, these buttons will operate the main functions of your VCR or DVD, once the remote control has been programmed. Refer to page 26.

⓴ **Media Selector:** press this button to select which device you want to operate, TV, VCR or DVD. A green light will be momentarily lit to show which one you have selected. For details refer to page 26.

㉑ **Displaying Info:** press this button to display all on-screen indication such as channel number, etc. Press again to cancel.

㉒ **Selecting TV mode:** press this button to switch off PAP, Teletext or Video input mode.

㉓ **PAP (Picture And Picture):** press this button to divide the screen into two for watching two channels simultaneously. Refer to page 21.

㉔ **Muting the sound:** press this button to mute the TV sound. Press again to restore the sound.

Overview of Remote Control Buttons

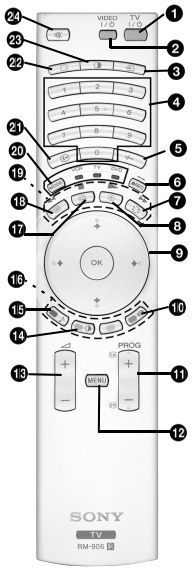

❶ **TV I/⏻ : To Temporarily Switch Off TV (standby mode):**
Press this button to temporarily switch off TV (the standby indicator ⏻ on the TV lights up). Press again to switch on TV from standby mode.

⚠ • To save energy we recommend switching off completely when TV is not in use.
• After 15 minutes without TV signal and without any button being pressed, the TV switches automatically into standby mode.

❷ **VCR or DVD on/off:** press this button to switch your VCR or DVD on or off.

❸ **Selecting input source:** press this button repeatedly until the desired input symbol of the source appears on the TV screen. Refer to page 25.

❹ **Selecting broadcast channels:** if Media Selector (⓴ is switched to TV, press these buttons to select channels. For double-digit programme numbers, enter the second digit within 2.5 seconds.

❺ **Selecting VCR double-digit:** if Media Selector (⓴) is switched to VCR, press this button to select double-digit channels for Sony's VCR e.g. 23, press -/-- first and next the buttons 2 and 3.

❻ **a) Recording button:**
If Media Selector (⓴) is switched to VCR, press this button to record programmes.

b) Resetting to factory set levels:
Press, for a minimum of 3 seconds, to return the picture and sound settings to the factory default levels. This will also return the set to the install condition and the "Auto Tuning" menu will appear on the screen. If this is the case refer to the section "Switching on the TV set and automatically Tuning" (page 11, step 5) of this manual.

❼ **Watching last channel selected:** if Media Selector (⓴) is switched to TV, press this button to return to the previous channel you were watching (provided you watched it for at least 5 seconds).

❽ **Freezing a teletext page:** in teletext mode, press this button to freeze a teletext page. Press it again to cancel the freeze.

❾ **a) Displaying a channel index:** if Media Selector (⓴) is switched to TV and MENU is switched off, press **OK** to display a channel overview. If you want to select a channel, press ↓ or ↑ next press again the **OK** button to watch the selected channel.

b) Navigator: if Media Selector (⓴) is switched to TV and MENU (⓬) is switched on, use these buttons to navigate through the menu system of the TV. Refer to page 12.

❿ **Selecting the screen format:** press this button repeatedly to change the format of the screen. Refer to page 16.

⓫ **Selecting broadcast channels:** press these buttons to select the next or previous broadcast channel.

⓬ **Menu system:** press this button to enter the TV menu system. Refer to page 12.

⓭ **Adjusting volume:** press these buttons to increase or decrease the audio volume.

⓮ **Selecting picture mode:** press this button repeatedly to change the picture mode. For details on the different picture modes. Refer to page 13.

⓯ **Selecting the sound effect:** Press this button repeatedly to change the sound effect. For details on different sound effects. Refer to page 14.

⓰ **Fastext:** In Teletext mode, these buttons can be used as Fastext buttons. For details see page 22.

⓱ **NexTView:** press this button to display NexTView. For details. Refer to page 23.

⓲ **Teletext:** press this button to switch on Teletext. For details see page 22.

⓳ **Operating VCR or DVD:** if Media Selector (⓴) is switched to VCR or DVD, these buttons will operate the main functions of your VCR or DVD, once the remote control has been programmed. Refer to page 26.

⓴ **Media Selector:** press this button to select which device you want to operate, TV, VCR or DVD. A green light will be momentarily lit to show which one you have selected. For details refer to page 26.

㉑ **Displaying Info:** press this button to display all on-screen indication such as channel number, etc. Press again to cancel.

㉒ **Selecting TV mode:** press this button to switch off PAP, Teletext or Video input mode.

㉓ **PAP (Picture And Picture):** press this button to divide the screen into two for watching two channels simultaneously. Refer to page 21.

㉔ **Muting the sound:** press this button to mute the TV sound. Press again to restore the sound.

Connecting the Aerial and VCR

ⓘ • Connecting cables are not supplied.
• For more details of VCR connections as well as other connections, please refer to page 24.

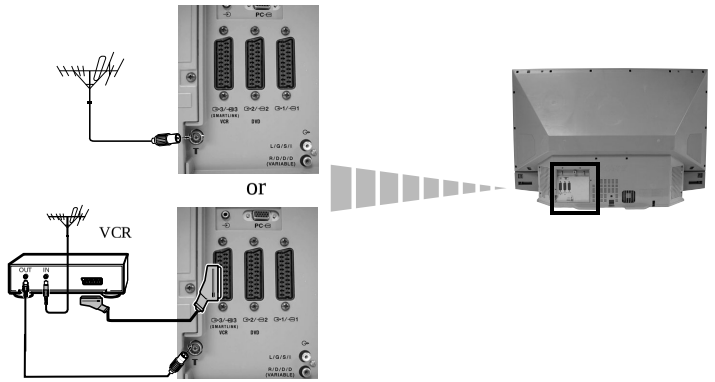

ⓘ The Scart lead is optional. If you use this optional connection it can improve picture and sound quality when using a VCR.

⚠ If you do not use a Scart lead, you will need to manually tune the VCR to a spare channel once the autotune procedure has been completed. Refer to "Manual Programme Preset" on page 20. Also refer to your VCR instruction manual to find out how to find the output channel of your VCR.

Stabilizing the TV set

⚠ After setting up, secure the TV set to a wall, etc., using the supplied brackets and screws, for safety purposes.

1 Mount the two supplied brackets with the screws provided to the upper rear side of the TV set.

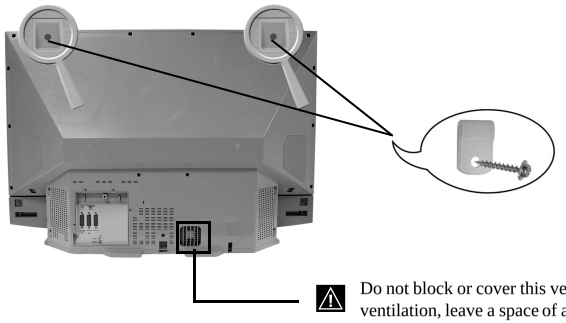

⚠ Do not block or cover this ventilation opening. For ventilation, leave a space of at least 10 cm from the wall.

2 Pass a strong cord or a chain through each bracket, and then secure to a wall or a pillar, etc.

Switching On the TV and Automatically Tuning

The first time you switch on your TV, a sequence of menu screens appear on the TV enabling you to: 1) choose the language of the menu screen 2) Choose the country in which you are going to operate the TV, 3) check how to connect optional equipment to your TV, 4) search and store all available channels (TV Broadcast) and 5) change the order in which the channels (TV Broadcast) appear on the screen.
However, if you need to change any of these settings at a later date, you can do that by selecting the appropriate option in the (Set Up menu).

1 Connect the TV plug to the mains socket (220-240V AC, 50Hz)
The first time that the TV set is connected, it is usually turned on. If the TV is off, press the ⏻ on/off button on the TV set to turn on the TV.
The first time you switch on the TV, a **Language** menu displays automatically on the TV screen.

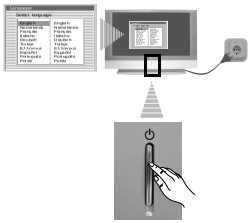

2 Press the ↑, ↓, ← or → buttons on the remote control to select your language, then press the **OK** button to confirm your selection. From now on all the menus will appear in your chosen language.

3 The **Country** menu appears automatically. Press the ↓ or ↑ button to select the country in which you are using the TV. Press the **OK** button to confirm your selection.

- If the country in which you want to use the TV set does not appear in the list, select “off” instead of a country.
- To avoid wrong teletext characters for cyrillic languages we recommend selecting Russia country if your own country does not appear in the list.

continued...

4 A diagram will appear showing you how to connect a wide range of equipment to your TV set. Follow the instructions and finally press the **OK** button to remove the picture and continue the automatic process.

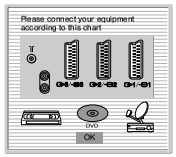

After the automatic tuning process has finished and the optional equipment has been connected at this stage, we recommend you follow the instructions explained on the section "Connection Guide" on page 17 to get the optimum settings related with the optional equipment.

5 The **Auto Tuning** menu appears on the screen. Press the **OK** button to select **Yes**.

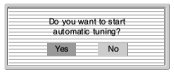

6 The TV starts to automatically search and store all available broadcast channels for you.

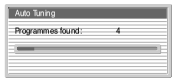

This procedure could take some minutes. Please be patient and do not press any buttons, otherwise automatic tuning will not be completed.

In some countries the TV Broadcaster installs the channels automatically (ACI system). In this case, the TV Broadcaster sends a menu in which you can select your city by pressing the ↓ or ↑ button and **OK** to store the channels.

If no channels were found during the auto tune process, a message appears automatically on the screen asking you to connect the aerial. Check the aerial connection (refer to page 9). Press the **OK** button to restart the auto tuning process.

7 After all available channels are captured and stored, the **Programme Sorting** menu automatically appears on the screen enabling you to change the order in which the channels are stored.

a) If you wish to keep the broadcast channels in the tuned order, go to step 8.

b) If you wish to store the channels in a different order:

1 Press the ↓ or ↑ button to select the programme number with the channel (TV Broadcast) you wish to move. Press the → button.

2 Press the ↓ or ↑ button to select the new programme number position for your selected channel (TV Broadcast). Press the **OK** button to store.

3 Repeat steps b)1 and b)2 if you wish to change the order of the other channels.

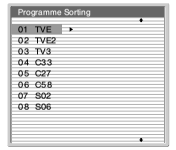

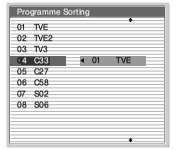

8 Press the **MENU** button to remove the menu from the screen

Your LCD TV is now ready for use

Introducing and Using the Menu System

Your LCD TV uses an On-Screen menu system to guide you through the operations. Use the following buttons on the Remote Control to operate the menu system:

1 **To switch on the menu screens**:

Press the **MENU** button to switch the first level menu on.

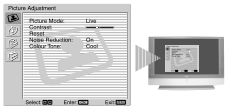

2 **To navigate through the menus:**

- To highlight and select the desired menu or option, press ↓ or ↑.
- To enter the selected menu or option, press **OK** or →.
- To return to the last menu or option, press **OK** or ←.
- To alter the settings of your selected option, press ↓/↑/← or →.
- To confirm and store your selection, press **OK**.

3 **To switch off the menu screens:**

Press the **MENU** button to remove the menu from the screen.

The Picture Adjustment Menu

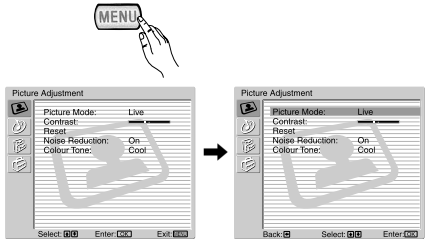

The "Picture Adjustment" menu allows you to alter the picture settings.

To do this:
Press the **MENU** button and then press **OK** to enter this menu. Next press ↓ or ↑ to select the desired option and press **OK**. Finally read below how to operate into each option.

Picture Mode This option allows you to customise the Picture Mode based on the programme you are watching. After selecting this option press **OK**. Next press repeatedly ↓ or ↑ to select:

Personal (for individual settings).
Live (for live broadcast programmes, DVD and Digital Set Top Box receivers).
Movie (for films).

Once you have selected your desired option, press **OK** to store.

"Brightness", "Colour" and "Sharpness" level of "Live" and "Movie" mode are fixed on the factory to get the best picture quality.

Contrast	Press ← or → to reduce or enhance picture contrast. Next press **OK** to store.
Brightness	Press ← or → to darken or brighten the picture. Next press **OK** to store.
Colour	Press ← or → to decrease or to increase color intensity. Next press **OK** to store.
Hue	Press ← or → to decrease or to increase the green tones. Next press **OK** to store.
Sharpness	Press ← or → to soften or to sharpen the picture. Next press **OK** to store.
Reset	Press **OK** to reset the picture to the factory preset levels.
Noise Reduction	This option is set to **On** to automatically reduce the snowy picture visible in the broadcast signal. To cancel this function, press ↓ or ↑ to select **Off**.
Colour Tone	This option allows you to alter the tint of the picture. After selecting this option press →. Next press repeatedly ↓ or ↑ to select: **Warm** (gives the white colours a red tint), **Normal** (gives the white colours a neutral tint), **Cold** (gives the white colours a blue tint). Next press **OK** to store.
Lines Correction	While viewing an RGB input signal from the PC connector, some picture lines may be not correctly displayed. To correct this problem, select this option and press →. Next press repeatedly ↓ or ↑ to correct it berween -20 and +20. Finally press **OK** to store.

- "Brightness" "Colour" and "Sharpness" only appears and only can be altered if "Picture mode" is set to "Personal".
- "Hue" only appears and only can be altered for NTSC signal (e.g. USA video tapes).
- For an RGB input signal connected to the PC connector, only appear and only can be altered: "Contrast", "Brightness" and "Lines Correction".

The Sound Adjustment Menu

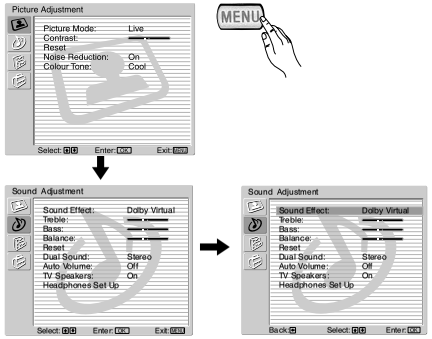

The "Sound Adjustment" menu allows you to alter the sound settings.

To do this:
Press the **MENU** button and press ↓ to select ♪, then press **OK** to enter this menu. Next press ↓ or ↑ to select the desired option and press **OK**. Finally read below how to operate into each option.

Sound Effect This option allows you to customise the Sound Effect. After selecting this option press **OK**. Next press repeatedly ↓ or ↑ to select:

- **Off** (Flat response).
- **Natural** (Enhances clarity, detail and presence of sound by using "BBE High Definition Sound system"*).
- **Dynamic** ("BBE High Definition Sound system"* intensifies clarity and presence of sound for better intelligibility and musical realism).
- **Dolby** Virtual** (Dolby Virtual, simulates the sound effect of "Dolby Surround Pro Logic").

Once you have selected your desired option, press **OK** to store.

Treble Press ← or → to decrease higher-frequency sounds. Next press **OK** to store.

Bass Press ← or → to decrease or to increase the lower-frequency sounds. Next press **OK** to store.

Balance Press ← or → to emphasise the left or the right speaker. Next press **OK** to store.

Reset Press **OK** to reset the sound to the factory preset levels. Next press **OK** to store.

Dual Sound
- For a Stereo broadcast:
  Press ↓ or ↑ to select **Stereo** or **Mono**. Next press **OK** to store.
- For a bilingual broadcast:
  Press ↓ or ↑ to select **Mono** (for mono channel if available), **A** (for channel 1) or **B** (for channel 2). Next press **OK** to store.

continued...

Auto Volume Press ↓ or ↑ to select **On** (the volume level of the channels will stay the same, independent of the broadcast signal, e.g. in the case of advertisements) or **Off** (the volume level changes according to the broadcast signal). Next press **OK** to store.

⚠ If you select "Dolby Virtual" on the "Sound Effect" option, the "Auto Volume" option will automatically be switched to "Off" and vice versa.

TV Speakers This option allows you to select if you want to listen the TV from the TV speakers or from an external amplifier connected to the audio outputs on the rear of the TV.

After selecting this option, press **OK**. Next press repeatedly ↓ or ↑ to select:

- **On** (to listen the TV from the TV set speakers).
- **One time off** (to listen to the TV from the external amplifier only one time. By using this option, any time the TV is turned off/on, it returns to the default setting "On").
- **Permanent off** (to always listen to the TV from external amplifier).

Once you have selected your desired option, press **OK** to store.

If you have selected "One time off" or "Permanent off", the volume of the external equipment can also be altered by pressing the +/- buttons of the remote control. When the volume buttons are pressed, the symbol will appear indicating that the volume you are altering is not the volume of the TV set speakers, it is from the external equipment.

Headphones Set Up This option allows you to customise the headphones volume and the PAP settings (refer to page 21 for details on PAP).

After selecting this option press **OK**. Next press repeatedly ↓ or ↑ to select:

- **volume** Press ← or → to decrease or increase the volume level from the headphones.
- **Dual Sound**
  - For a Stereo broadcast:
    Press ↓ or ↑ to select **Stereo** or **Mono**
  - For a bilingual broadcast:
    Press ↓ or ↑ to select **Mono** (for mono channel if available), **A** (for channel 1) or **B** (for channel 2).
- **PAP Sound** Select **Frame** if you want to listen to the active screen (framed) of the PAP screen (see page 21), select **Left picture** if you want to listen to the left screen or select **Right picture** if you want to listen to the right screen.

* The "BBE High Definition Sound system" is manufactured by Sony Corporation under license from BBE Sound, Inc. It is covered by U.S. Patent No. 4,638,258 and No. 4,482,866. The word "BBE" and BBE Symbol are trademarks of BBE Sound, Inc.

**This TV has been designed to create surround sound effect by simulating the sound of four speakers with two speakers, when the broadcast audio signal is Dolby Surround encoded. The sound effect can also be improved by connecting a suitable external amplifier (for details refer to page 25).

** Manufactured under license from Dolby Laboratories. "Dolby" and the double-D symbol are trademarks of Dolby Laboratories.

The Features Menu

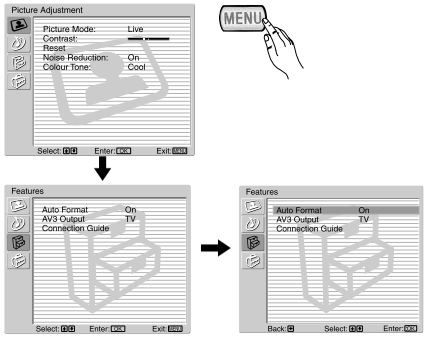

The “Features” menu allows you to alter various settings of the TV.

To do this:

Press the **MENU** button and press ↓ twice to select , then press **OK** to enter this menu. Next press ↓ or ↑ to select the desired option and press **OK**. Finally read below how to operate into each option.

AUTO FORMAT

This option allows you to automatically change the aspect ratio of the screen.

To do this:

After selecting the option, press **OK**. Then press ↓ or ↑ to select **On** (if you wish the TV set to automatically switch the screen format according to the broadcast signal) or **Off** (if you wish to keep your preference). Finally press **OK** to store.

Even if you have selected “On” or “Off”, you can always modify the format of the screen by pressing repeatedly on the remote control to select one of the following formats:

SMART: Imitation of wide screen effect for 4:3 broadcast.

4/3: Conventional 4:3 picture size, full picture information.

14/9: Compromise between 4:3 and 16:9 picture size.

ZOOM: Widescreen format for letterbox movies.

WIDE: For 16:9 broadcast. Full picture information.

- In “SMART”, “ZOOM” and “14/9” modes, parts of the top and bottom of the screen are cut off. Press ↓ or ↑ to adjust the position of the image on the screen (e.g. to read subtitles).
- Only "WIDE" and "4/3" modes can be selected for an RGB signal connected to the PC connector.
- According to the format of diffussion, black bands can always appear whatever the selected mode.

AV3 OUTPUT

This option allows you to select the source to be output from the Scart connector 3/3 so that you can record from this Scart any signal coming from the TV or from an external equipment connected to the Scart connector 1/1, 2/2 or front connectors 4 or 4 and 4.

If your VCR supports SmartLink, this procedure is not necessary.

To do this:

Once you have entered into the "Features" menu as it is explained in the previous page and after selecting the option, press OK. Then press ↓ or ↑ to select the desired output signal:

TV to output the aerial source.
AV1 to output sources connected to 1/1.
AV2 to output sources connected to 2/2.
AV4 to output sources connected to 4 or 4 and 4.
AUTO to output the signal that is being viewed on the TV.

- If you select “AUTO”, the output signal will always be the same one that is displayed on the screen.
- If you have connected a decoder to the Scart 3/3 or to a VCR connected to this Scart, please remember to change back the “AV3 Output” to “TV” for correct unscrambling.

CONNECTION GUIDE

Even you have already connected the external equipment to the TV set, it is important for you to follow the instructions of this menu. If you proceed in this way, you will get the optimum picture settings related with the optional equipment.

To do this:

1 Once you have entered the "Features" menu as it is explained in the previous page and after selecting the option, press **OK**. Next press ↓ or ↑ to chose the equipment you want to connect among the available: **SAT** (satellit)**, Decoder, DVD, GAME, VIDEO** or **DVD rec**. (DVD recorder). Next press → to select the equipment chosen (equipment selected also can be deleted by pressing ←). Once you have selected all the equipment to be connected, press ↓ or ↑ to select "**Confirm**" and press **OK**.

2 A new menu will appear showing you on which Scart connector of the rear of the TV should be connected each equipment. Please connect each equipment according to this information to get the optimum picture setting of the optional equipment.

3 Once you have connected the optional equipment, press ← or → to select "**OK**" and finally press the **OK** button of the remote control.

We strongly recommend you to follow our connection proposals, but in case you do not agree press ← or → to select «No» and next press the OK button. A new menu appears on the screen in which you can assign the connections according to your preferences.

RGB CENTRING

This option is only available if an RGB source has been connected to the TV.

This option allows you to readjust the horizontal position of the picture in case you need to do it when connecting an RGB source.

To do this:

Once you have entered the "Features" menu as it is explained in the previous page and while watching an RGB source select the “RGB Centring” option and press **OK**. Then press ↓ or ↑ to adjust the centre of the picture between –5 and +5. Finally press **OK** to confirm and store.

The Set Up Menu

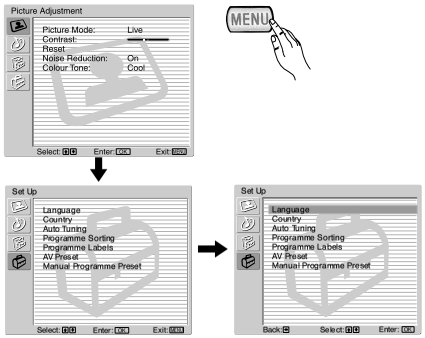

The “Set Up” menu allows you to alter various options on this TV.

To do this:
Press the **MENU** button and press ↓ three times to select , then press **OK** to enter this menu. Next press ↓ or ↑ to select the desired option and press **OK**. Finally read below how to operate into each option.

LANGUAGE

This option allows you to select the language that menus are displayed in.

To do this:
After selecting the option, press **OK** and then proceed in the same way as in step 2 of the section "Switching On the TV and Automatically Tuning" on page 10.

COUNTRY

This option allows you to select the country in which you wish to operate the TV set.

To do this:
After selecting the option, press **OK** and then proceed in the same way as in step 3 of the section "Switching On the TV and Automatically Tuning" on page 10.

AUTO TUNING

This option allows you to automatically search for and store all available TV channels.

To do this:
After selecting the option, press **OK** and then proceed in the same way as in the steps 5 and 6 of the section “Switching On the TV and Automatically Tuning” on page 11.

PROGRAMME SORTING

This option allows you to change the order in which the channels (TV Broadcast) appear on the screen.

To do this:
After selecting the option, press **OK** and then proceed in the same way as in the step 7 of the section “Switching On the TV and Automatically Tuning” on page 11.

continued...

PROGRAMME LABELS

This option allows you to name a channel using up to five characters (letters or numbers).

To do this:

1 Once you have entered the "Set Up" menu as it is explained in the previous page and after selecting the option, press **OK**, then press ↓ or ↑ to select the programme number with the channel you wish to name. Next press **OK**.

2 With the first element of the **Label** column highlighted, press **OK** and ↓, ↑, ← or → to select the letter, next press **OK**.
When you have finished, press ↓, ↑, ← or → to select the word “**End**” on the screen and finally press **OK** to turn off the menu from the screen.

- To correct the letter, select "←" on the screen to go back and press **OK**.
- For a blank, select "□" on the screen and press **OK**.

AV PRESET

This option allows you to:

a) Designate a name to the external equipment you have connected to the input sockets of the TV set.

To do this:

1 Once you have entered the "Set Up" menu as it is explained in the previous page and after selecting the option, press **OK**, then press ↓ or ↑ to select the input source you wish to name: **AV1, AV2** or **AV3** for the rear Scarts, **AV4** for front connectors and **AV5** for the PC input connector. Next press **OK** twice.

2 A label automatically appears in the label column:

a) If you want to use one of the predefined labels, press ↓ or ↑ to select the desired label and finally press **OK**.

The total predefined labels are: **VIDEO, DVD, CABLE, GAME**, **CAM** (camcorder), **SAT** (satellite) or **PC** (only for the AV5).

b) If you want to set a different label, select **Edit** and press **OK**. Then, with the first element highlighted, press ↓, ↑, ← or → to select the letter, next press **OK**. When you have finished, press ↓, ↑, ← or → to select the word “**End**” on the screen and finally press **OK** to turn off the menu from the screen.

- To correct the letter, select "←" on the screen to go back and press **OK**.
- For a blank, select "□" on the screen and press **OK**.

b) Change the input sound level of the optional equipment connected.

To do this:
Once you have entered the "Set Up" menu as it is explained in the previous page and after selecting the option press **OK**, then press ↓ or ↑ to select the input source you want to alter the input sound level: **AV1, AV2** or **AV3** for the rear Scarts, **AV4** for front connectors and **AV5** for the PC input connector. Next press twice → to highlight the **Sound Offset** column. Finally press **OK** and ↓ or ↑ to alter the input sound level between -9 and +9.

continued...

MANUAL PROGRAMME PRESET
This option allows you to:

a) Preset channels or the VCR channel one by one to the programme order of your choice.

To do this:

1 Once you have entered the “Set Up”menu as it is explained on page 18 and after selecting the "Manual Programme Preset" option, press **OK**. Next with **Programme** option highlighted press **OK**.
Press ↓ or ↑ to select which programme number you want to preset the channel on (for VCR, select programme number “0”). Then press ←.

2 The following option is only available depending on the country you have selected in the “Country” menu.
After selecting the **System** option, press **OK**. Then press ↓ or ↑ to select the TV Broadcast system (**B/G** for western European countries, **D/K** for eastern European countries, **L** for France or **I** for United Kingdom). Then press ←.

3 After selecting the **Channel Number** option, press **OK**. Next press ↓ or ↑ to select the channel tuning ("**C**" for terrestrial channels or "**S**" for cable channels). Then press the number buttons to enter directly the channel number of the TV Broadcast or the channel of the VCR signal. If you do not know the channel number, press → and ↓ or ↑ to search for it. When you have tuned the desired channel, press **OK** twice to store.

Repeat all the above steps to tune and store more channels.

b) Label a channel using up to five characters.

To do this:
Once you have entered the “Set Up”menu as it is explained on page 18 and after selecting the "Manual Programme Preset" option, press **OK**. Next with the **Programme** option, highlighted press the **PROG +/-** button to select the programme number with the channel you wish to name. When the programme you want to name appears on the screen, select the **Label** option and press **OK**. Then, with the first element highlighted, press ↓, ↑, ← or → to select the letter, next press **OK**. When you have finished, press ↓, ↑, ← or → to select the word “**End**” on the screen and finally press **OK** to turn off the menu from the screen.

- To correct the letter, select "⟵" on the screen to go back and press **OK**.
- For a blank, select "␣" on the screen and press **OK**.

c) Fine tune the broadcast reception. Normally the automatic fine tuning (AFT) will give the best possible picture, however you can manually fine tune the TV to obtain a better picture reception in case the picture is distorted.

To do this:
While watching the channel (TV Broadcast) you wish to fine tune, and once you have entered the “Set Up” menu as it is explained on page 18 and after selecting the "Manual Programme" option, press **OK**. Then select the **AFT** option and press →. Next press ↓ or ↑ to adjust the fine tuning between -15 and +15. Finally press **OK** twice to store.

d) Skip any unwanted programme numbers when they are selected with the PROG +/- buttons.

To do this:
Once you have entered the "Set Up" menu as it is explained on page 18 and after selecting the "Manual Programme Preset" option, press **OK**. Next with the **Programme** option highlighted, press the **PROG +/-** button to select the programme number you want to skip. When the programme you want to skip appears on the screen, select the **Skip** option and press →. Next press ↓ or ↑ to select **On**. Finally press **OK** twice to confirm and store.

To cancel this function afterwards, select “Off” instead of “On” in the step above.

e) View and record scrambled channels (e.g. from a pay TV decoder) when using a decoder connected to Scart ⇨3/⇦3 directly or through a VCR.

This option is only available depending on the country you have selected in the “Country” menu.

To do this:
Once you have entered the "Set Up" menu as it is explained on page 18 and after selecting the "Manual Programme Preset" option, press **OK**. Next select the **Decoder** option and press →. Next press ↓ or ↑ to select **On**. Finally press **OK** twice to confirm and store.

To cancel this function afterwards, select "Off" instead of "On" in the step above.

PAP (PICTURE AND PICTURE)

PAP divides the screen into two to watch two pictures in format 4:3 simultaneously.

Switching PAP on and off

1 Press ◑ to display PAP.

One of the screens will be framed to indicate that this is the active screen. It means that when you want to select the PAP source, you will be doing it in the active screen.

2 Press ◑ again to remove PAP.

On the screen appears a banner guiding you how to operate PAP. This banner will disappear after some seconds but it always can be displayed again by pressing the ⊞ button.

Changing the active screen

This is only possible if Media Selector is set to TV.

To change the active screen (framed), press the ← or → buttons.

Selecting PAP source

1 **Selecting a TV channel:**
Press the ← button to select the left screen as the active screen. Next press the number buttons or **PROG +/-** to select a TV channel.

Video input signals can not be displayed on the left screen.

2 **Selecting an input source:**
Press the → button to select the right screen as the active screen. Next press repeatedly the ⇨ button to watch the input signal of a connected equipment onto the TV right screen. For more details on which input symbol you want to choose, please see section "Viewing pictures from equipment connected to the TV" on page 25.

RF signal (TV broadcast channels) can not be displayed on the right screen.

Selecting the sound

The sound of the active screen (framed) always comes from the TV set loudspeakers.
Besides that, you can listen to the active screen as well as the non active screen via headphones.

To do this:
With the PAP switched on, refer to the section "The Sound Adjustment Menu", select "Headphones Set Up" and set the option "🎧 PAP Sound" according your preference. For details see page 15.

In PAP (picture and picture) mode, the output from the Scart ⇨2/⇦2 is fixed to the right picture.

Teletext

Teletext is an information service transmitted by most TV stations. The index page of the teletext service (usually page 100) gives you information on how to use the service. To operate teletext, use the remote control buttons as indicated below.

Teletext errors may occur if you use a channel (TV Broadcast) with a weak signal.

To switch on Teletext :

1 Select the broadcast channel which carries the teletext service you wish to view.

2 Press the button one time to enter Picture and Text (P&T) mode. The screen is divided into two with the Text display on the left and the TV channel in the right corner.

3 If you wish to view the Text in full screen mode, press the button a second time.

To select a Teletext page:

Input 3 digits for the page number, using the numbered buttons.

- *If you make a mistake, retype the correct page number.*
- *If the counter on the screen continues searching, it is because the page is not available. If this is the case, input another page number.*

To access the next or preceding page:

Press PROG + ( ) or PROG - ( ) .

To freeze a teletext page:

Press . Press it again to cancel the freeze.

To select a sub page:

A teletext page may consist of several sub pages. In this case, one or more arrows appear next to the page number and an information box is displayed at the bottom of the screen showing the number of sub pages contained on this page. As soon as sub pages are available, they start to automatically run. If you want to stop the show and select your desired sub page, press repeatedly ← or →.

To Switch Off Teletext:

Press .

Fastext

Fastext service lets you access Teletext pages with one button push.
When you are in Teletext mode and Fastext is broadcast, a colour coded menu appears at the bottom of the teletext page. Press the appropriate coloured button (red, green, yellow or blue) to access the page corresponding to your menu choice.

NexTView*

*(depending on availability of service).

NexTView is an on-screen electronic programme guide, providing you with programme information for different broadcasters.
When looking for information you can search by theme (sports, art, etc...) or date.

If wrong characters appear when viewing NexTView, use the menu system to enter the “Language” menu (see page 18) and select the same language as the NexTView is broadcasted.

Displaying NexTView

1 Select a broadcast channel providing a NexTView service. In this case the indication “NexTView” is displayed as soon as data is available.

2 To see NexTView service you have two different types of NexTView interface. These depend on the % of available data:

a) “Programme List” interface:
Whilst you are watching TV, and after the indication “NexTView” (coloured white) is displayed on the screen, press the button on the remote control to watch the “Programme List” interface (see fig. 1).

b) “Overview” interface:
Whilst you are watching TV, and after more than 50% of NexTView data is available (100% data may not be available depending on the area) the indication “NexTView” (coloured black) is displayed on the screen. Press the button on the remote control to watch the “Overview” interface (see fig. 2).

3 To navigate through NexTView:

- Press ← or → to move left or right.
- Press ↓ or ↑ to move downwards or upwards.
- Press **OK** to confirm a selection.
- If you have selected a programme, press **OK** to get more information on the selected programme.

4 To switch NexTView off, press the button on the remote control.

“Programme List” interface (fig. 1):

“Overview” interface (fig. 2):

1 Programmme list

2 Date:
Press the **red button** of the remote control to display the date screen, you can select the desired date by pressing ↓ or ↑. Next press **OK** to confirm.

3 Categories:
Press the **blue button** of the remote to display the icons (see below the Icon’s key) for different themes. Next press ↓ or ↑ to select the desired icon and finally press the **OK** button to confirm.

Icons’ key:

General:
All the programme information is listed by time and broadcast channels order.

News

Movie

Sports

Show

Children

Arts

Music

Connecting Equipment to the TV

- Using the following instructions you can connect a wide range of optional equipment to your TV set.
- Connecting cables are not supplied.

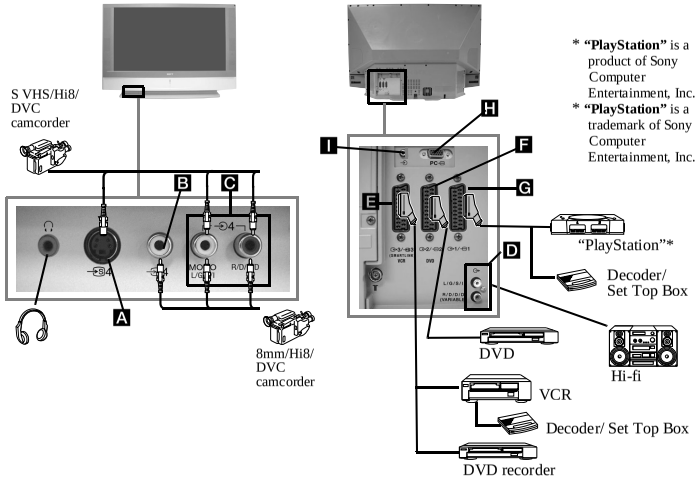

* **"PlayStation"** is a product of Sony Computer Entertainment, Inc.
* **"PlayStation"** is a trademark of Sony Computer Entertainment, Inc.

- To avoid picture distortion, do not connect external equipment to connectors **A** and **B** at the same time.
- Do not connect a Decoder to the Scart **F**.

Connecting a VCR

To connect a VCR, please refer to the section "Connecting the aerial and VCR" of this instruction manual on page 9.

Connecting a VCR that supports SmartLink

SmartLink is a direct link between the TV set and the VCR. For more information on SmartLink, please refer to the instruction manual of your VCR.
If you use a VCR that supports SmartLink, please connect the VCR to the TV using a Scart lead to the Scart 3/ 3 **E**.

If you have connected a decoder or a Set Top Box to the Scart 3/ 3 E or through a VCR connected to this Scart

Select the "Manual Programme Preset" option in the "Set Up" menu and after entering in the "Decoder**" option, select "On" (refer to page 20). Repeat this option for each scrambled signal.

**This option is only available depending on the country you have selected in the "Country" menu.

continued...

Connecting Audio Equipment to the TV

Conect your audio equipment to the audio output sockets **D** if you wish to amplify the audio output from TV. Next , using the menu system, select the "Sound Adjustment" menu and set the "TV Speakers" to "One time off" or "Permanent off" (see page 15).

The volume of the external speakers can be altered by pressing the volume buttons on the remote control. The Treble and Bass settings can also be altered through the "Sound Adjustment" menu (see page 14).

To enjoy "Dolby Virtual" sound effect through your audio equipment

Place the speakers of your equipment in front of your listening position and beside the TV set, keeping a distance of 50 cm between each speaker and the TV set.
Then by using the menu system, select the menu "Sound Adjustment". Next select "Dolby Virtual" on the "Sound Effect" option (see page 14).

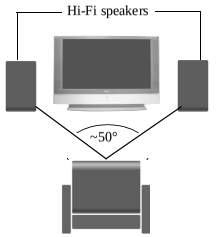

Viewing pictures from equipment connected to the TV

1. Connect your equipment to the designated TV socket, as indicated in the previous page.
2. Switch on the connected equipment.
3. To watch the picture of the connected equipment, press the button repeatedly until the correct input symbol appears on the screen.

Symbol	Input Signals
1	• Audio / video input signal through the Scart connector **G**
1	• RGB input signal through the Scart connector **G**. This symbol appears only if an RGB source has been connected.
2	• Audio / video input signal through the Scart connector **F**.
2	• RGB input signal through the Scart connector **F**. This symbol appears only if an RGB source has been connected.
3	• Audio/video input signal through the Scart connector **E**.
3	• S Video Input signal through the Scart connector **E**. This symbol appears only if an S Video source has been connected.
4	• Video input signal through the phono socket **B** and Audio input signal through **C**.
4	• S Video Input signal through the front S Video input jack **A** and Audio signal through **C**. This symbol appears only if an S Video source has been connected.
5	• RGB input signal through the PC connector **H** and **I**.

4. Press the button on the remote control to return to the normal TV picture.

For Mono Equipment

Connect the phono plug to the L/G/S/I socket on the front of the TV and select 4 or 4 input signal using the instructions above. Next, refer to the "Sound Adjustment" section of this manual and set "Dual Sound" option to "A" on the sound menu screen (see page 14).

Remote Control Configuration for VCR or DVD

In it's default condition this remote control will operate the basic functions of this Sony TV, Sony DVDs and most Sony VCRs. To control VCRs and DVDs of other manufacturers (and some Sony VCR models), the remote control needs to be configured.

fig. 3

To do this:

- Before you start, look up the 3 digit code for your brand of DVD or VCR from the list below. On those brands that have more than one code, enter the first code number.
- A small label is added inside the battery door to allow you to record your brand codes.

1 Press the **Media Selector button** until the required green light (VCR or DVD) is lit (see fig. 1).

fig. 1

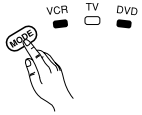

2 Before the green light goes out, press and hold the **yellow button** for approximately 6 seconds until the green light (VCR or DVD) starts flashing (see fig. 2.).

3 While the VCR and DVD lights are flashing, enter all three digits of the code for your brand of VCR or DVD (see the list below) using the **number buttons** on the remote control (see fig. 3).

fig. 2

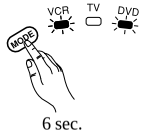

If your selected code is entered correctly, the three green lights will be lit momentarily. Otherwise repeat all the above steps.

4 Turn on your VCR or DVD and check that the main functions work.

- If your device is not working or some of the functions do not work please check that you entered the correct code set or try the next code listed against the brand.
- Not all brands are covered and not all models of every brand may be covered.

5 Always remember to press **Media Selector button** until the green light iluminates according to the equipment you want to operate with this remote control: **VCR, TV** or **DVD**.

VCR Brand List

Brand	Code
SONY (VHS)	301, 302, 303, 308, 309,362
SONY (BETA)	303, 307, 310
SONY (DV)	304, 305, 306
AIWA	325, 331, 351
AKAI	326, 329, 330
DAEWOO	342, 343
GRUNDIG	358, 355, 360, 361, 320, 351, 366
HITACHI	327, 333, 334
JVC	314, 315, 322, 344, 352, 353, 354, 348, 349
LG	332, 338
LOEWE	358, 355, 360, 361, 320, 351
MATSUI	356, 357
ORION	328
PANASONIC	321, 323
PHILIPS	311, 312, 313, 316, 317, 318, 358, 359, 363, 364
SAMSUNG	339, 340, 341, 345
SANYO	335, 336
SHARP	324
THOMSON	319, 350, 365
TOSHIBA	337

DVD Brand List

Brand	Code
SONY	001, 029, 030, 036, 037, 038, 039, 040, 041, 042, 043, 044, 053, 054, 055
AIWA	021
AKAI	032
DENON	018, 027, 020, 002
GRUNDIG	009, 028, 023, 024, 016, 003
HITACHI	025, 026, 015, 004, 035
JVC	006, 017
KENWOOD	008
LG	015, 014, 034
LOEWE	009, 028, 023, 024, 016, 003
MATSUI	013, 016
ONKYO	022, 033
PANASONIC	018, 027, 020, 002, 045, 046, 047
PHILIPS	009, 028, 023, 024, 016, 003, 031
PIONEER	004, 050, 051, 052
SAMSUNG	011, 014
SANYO	007
SHARP	019, 027
THOMSON	012
TOSHIBA	003, 048, 049
YAMAHA	018, 027, 020, 002

Optimum Viewing Area

For the best picture quality, try to position the TV set so that you can view the screen from within the areas shown below.

Horizontal viewing area

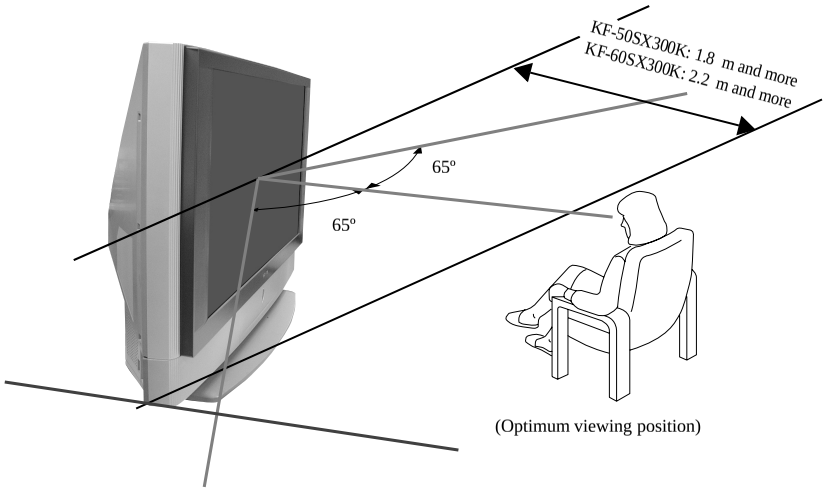

Vertical viewing area

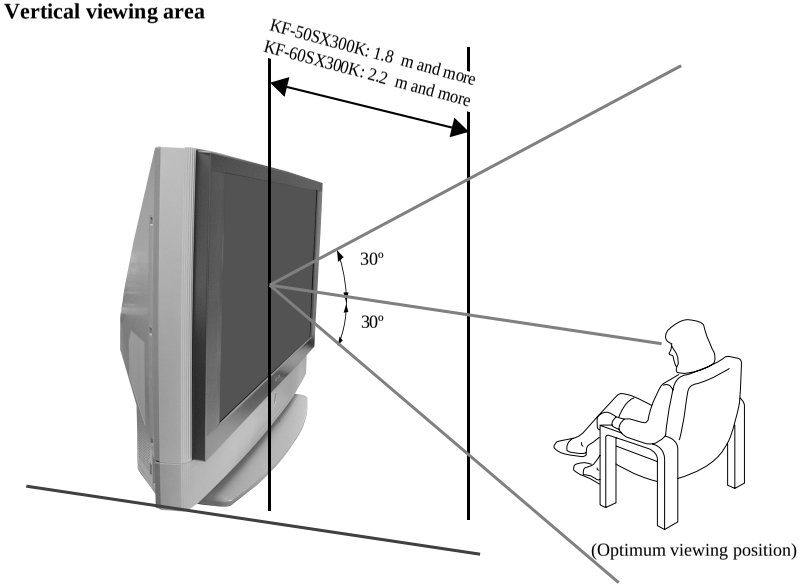

Replacing the lamp

When the lamp becomes dark or the picture colour is not normal or the lamp indicator on the TV set flashes, replace with a new lamp.

- Only use the lamp XL-2100E for replacement. If you use another lamp, it may cause damage to the TV set.
- Do not remove the lamp except when replacing it.
- Before replacing the lamp, turn off the power and disconnect the power cord.
- Replace the lamp only after it becomes cool. The front glass of the lamp remains at least 100 °C (212 °F) even after the power has been turned off for 30 minutes.
- Do not place the old lamp in proximity to children or flammable material.
- Do not get the old lamp wet, or insert objects inside the lamp. It may cause the lamp to explode.
- Do not place the old lamp near easily flammable objects, as this may cause fire. Also, do not put your hand inside the lamp compartment, as you may be burned.
- Attach the new lamp securely. If it is not securely attached, the picture may become dark.
- Do not touch or stain the front glass of the new lamp or the glass of the lamp compartment. If the glass become dirty, the picture quality may deteriorate or the lamp life may shorten.
- Attach the lamp cover firmly. If it is not firmly attached, the power will not turn on.
- When the lamp burns out, a noise is audible. This does not indicate damage to the TV set.
- Consult your nearest Sony service center to obtain a new lamp.
- Always remember to dispose of used lamps in an evironmentally friendly way.

1 **Turn off the power and disconnect the power cord.**

- If you start changing the lamp without disconnecting the power cord, the standby indicator on the TV set flashes. Disconnect the power cord to continue changing the lamp.
- Replace the lamp 30 minutes or more after the power is turned off to allow it to cool.
- Prepare the new lamp.

2 **Loosen the two screws placed on the left and right corner of the rear of the TV with an object such as a coin**.

3 **Remove the front panel**.
Remove the front panel without moving the TV set

Grasp the left and right side of the front panel with your fingers and pull it forward. Be careful not to catch your fingernails.

4 **Loosen the screw with an object such as a coin and remove the lamp cover.**

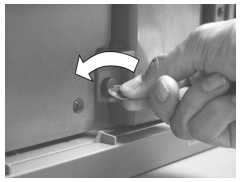

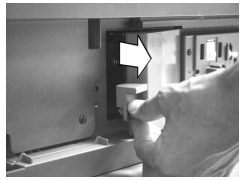

5 **Loosen the two screws and pull out the lamp.**

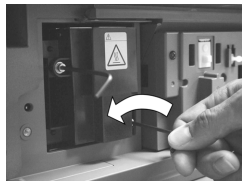

Loosen two screws with the hexagon key supplied.

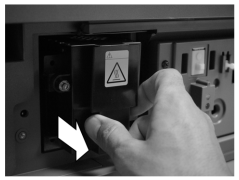

Pull out the lamp by the handle.

The lamp is still extremely hot immediately after the power is turned off. Be careful that you don't touch the front glass or surrounding area of the lamp or the glass of the lamp compartment.

6 **Attach the new lamp.**
Replace the new lamp securely in the lamp receptacle and fasten the screws tightly using the hexagon key supplied.

7 **Attach the lamp cover.**
Fasten the screw tightly with an object such as a coin.

8 **Attach the front panel.**
Attach the front panel by pushing left and right side into place. Next, fast again the two screws plaeed on the left and right corner of the rear of the TV.

Technical Specifications

TV system:
Depending on your country selection:
B/G/H, D/K, L, I

Colour system:
PAL
SECAM, NTSC 3.58, 4.43 (only Video In)

Channel Coverage:

VHF:	E2-E12
UHF:	E21-E69
CATV:	S1-S20
HYPER:	S21-S41
D/K:	R1-R12, R21-R69
L:	F2-F10, B-Q, F21-F69
I:	UHF B21-B69

Panel System:
LCD (Liquid Crystal Display) panel.

Projected picture size:
- KF-50SX300K: 50 inches (approx. 127 cm measured diagonally).
- KF-60SX300K: 60 inches (approx. 153 cm measured diagonally).

Rear Terminals
- **AV1**
  1/ 1
  21-pin scart connector (CENELEC standard) including audio/video input, RGB input, TV audio/video output.
- **AV2**
  2/ 2
  21-pin Scart connector (CENELEC standard) including audio / video input, RGB input, monitor audio/video output.
- **AV3**
  3/ 3
  21-pin Scart connector (CENELEC standard) including audio / video input, S video input, selectable audio / video output and SmartLink interface.
- audio outputs (Left/Right) - phono jacks
- PC audio input - minijack.
- **PC** PC input.

Front Terminals
- 4 S Video input – 4 pin DIN
- 4 video input – phono jack
- 4 audio input – phono jacks
- headphones jack

Sound Output:
2 x 20 W (music power)
2 x 10 W (RMS)
Woofer:
30 W (music power)
15 W (RMS)

Power Consumption:
210 W

Standby Power Consumption:
≤ 1 W

Dimensions (w x h x d) :
- KF-50SX300K:
  approx. 1376 x 923 x 442 mm.
- KF-60SX300K:
  approx. 1618 x 1062 x 542 mm.

Weight:
- KF-50SX300K:
  approx. 37.5 kg.
- KF-60SX300K:
  approx. 48.5 kg.

Accessories supplied:
- 1 Remote Control (RM-906)
- 2 Batteries (IEC designated, AAA size).
- 1 PC input cable.
- 1 Hexagon key.
- 2 Brackets.
- 2 Screews.
- 1 Cleaning Cloth.

Other features:
- Digital Comb Filter (High resolution).
- Teletext, Fastext, TOPtext.
- NexTView.
- SmartLink.
- TV system autodetection.
- Dolby Virtual.
- BBE Digital.
- NICAM.
- PAP.
- ACI (Auto Channel Installation).
- Auto Format.

Optional accessories:
- Stand especially designed for these sets (SU-5060SX3).

Design and specifications are subject to change without notice.

This instruction manual has been printed on:
Ecological Paper - Totally Chlorine Free

PC Input Specifications

PC Input Timing

Input signal frequency:
Horizontal: 31,4 - 48,4 KHz.
Vertical: 59 - 61 Hz.
Maximum Resolution: 1024 dots x -768 lines.

Preset mode timing table for PC

Nº	Resolution (dots x lines)	Graphic mode	Horizontal frequency (kHz)	Vertical frequency (Hz)
1	640 x 480	VESA 60	31.469	59.940
2	800 x 600	VESA 60	37.879	60.317
3	1024 x 768	VESA 60	48.363	60.004

Troubleshooting

Here are some simple solutions to problems which may affect the picture and sound.

TV

Problem	Solution
No picture (screen is dark) and no sound.	• Check the aerial connection. • Plug the TV in and press the ⏻ button on the front of the TV. • If the standby indicator ⏻ is on, press TV I/⏻ button on the remote control.
Poor or no picture (screen is dark), but good sound.	• Using the menu system, select the “Picture Adjustment” menu and select “Reset” to return to the factory settings (see page 13).
No picture or no menu information from equipment connected to the Scart connector.	• Check that the optional equipment is on and press the ⮌ button repeatedly on the remote control until the correct input symbol is displayed on the screen (see page 25).
Good picture, no sound.	• Press the + button on the remote control. • Check that “TV Speakers” is “On” in the “Sound Adjustment” menu (see page 14). • Check that headphones are not connected.
No colour on colour programmes.	• Using the menu system, select the “Picture Adjustment” menu and select “Reset” to return to factory settings (see page 13).
When you switch on the TV the last channel you were watching before switching the TV off does not appear.	• This is not a malfunction. Press the number buttons on the remote control to select the desired channel.
Distorted picture when changing programmes or selecting teletext.	• Turn off any equipment connected to the Scart connector on the rear of the TV.
Wrong characters appear when viewing teletext.	• Use the menu system to enter the “Country” menu (see page 18) and select the country in which you operate the TV set. For cyrillic languages, we recommend selecting Russia country if your own country does not appear in the list.
Wrong characters appear when viewing NexTView.	• Use the menu system to enter the “Language” menu (see page 18) and select the same language that NexTView is broadcast in.
Snowy picture when viewing a TV channel.	• Using the menu system, select the “Manual Programme Preset” menu and adjust Fine Tuning (AFT) to obtain better picture reception (see page 20). • Using the menu system, select the “Noise Reduction” option in the “Picture Adjustment” menu and select “On” to reduce the noise in the picture (see page 13).
No unscrambled picture whilst viewing an unscrambled channel with a decoder or a Set Top Box connected through the Scart connector ⮎3/⮌3	• Using the menu system, select the “Features” menu and set “AV3 Output” to “TV” (see page 17). • Check that the Decoder or the Set Top Box is not connected on the scart ⮎2/⮌2.

Problem	Solution
↓, ↑, ← and → buttons do not work in PAP mode.	• PAP navigation is only possible in TV mode, please check that Media Selector is set to TV.
Remote control does not function.	• Be sure you are ponting it towards the remote control receiver (see page 8). • Check that the Media Selector on the remote control is set to the device you are using (VCR, TV or DVD). • If the remote control does not operate the VCR or DVD even when the Media Selector has been set correctly. Enter the necessary code set as explained on page 26. • Replace the batteries.
The standby indicator ⏻ on the TV flashes.	• Contact your nearest Sony service centre.
The lamp indicator on front of the TV set is lit.	• Turn the TV off. Turn the TV on again, if the lamp indicator is still lit then replace the internal lamp. For details refer to pages 28 and 29.

Personal Computer

Problem	Solution
If no picture is displayed and the **NO SYNC** message appears on the screen.	• Check that the video signal cable is properly connected and all plugs are firmly seated in their sockets. • Check that the 15-Dsub video input connector’s pins are not bent or pushed in. **Personal Computer output format** • Check that the output signal format of the Personal computer is set to the corresponding format for the television. In case it is not, adjust the resolution and refresh rate to the corresponding signal (refer to page 31). **Problems caused by the connected computer** • The computer is in power saving mode. Try pressing any key on the computer keyboard. • Check that the computer’s power is "on". • Check that the computer’s keyboard is properly connected. • Check that the graphic board is completely seated in the proper bus slot. • In case of a notebook PC, check that the monitor signal is set to the external output, and the signal is correctly output to the television.
Some picture lines are not correctly displayed.	• Using the menu system, select the "Picture Adjustment" menu and adjust the "Lines Correction" option between -20 and +20 (see page 13).
Blurred letters or vertical lines or shade or noise is visible in detailed patterns.	• Small letters, check or mesh patterns cannot be accurately displayed. In this case, increase the size of the fonts and/or reduce the mesh pattern brightness.
The Startup or the Setting screens of the Personal Computer cannot be displayed.	• Depending on the PC, the Startup or Setting screens may not be displayed due to the output format of the image. These screens can be displayed on the monitor of the Personal Computer.

⚠ **• If you continue to experience problems, have your TV serviced by qualified personnel.**
• Never open the casing yourself.

SECTION 3 DISASSEMBLY

3-1. REAR COVER REMOVAL

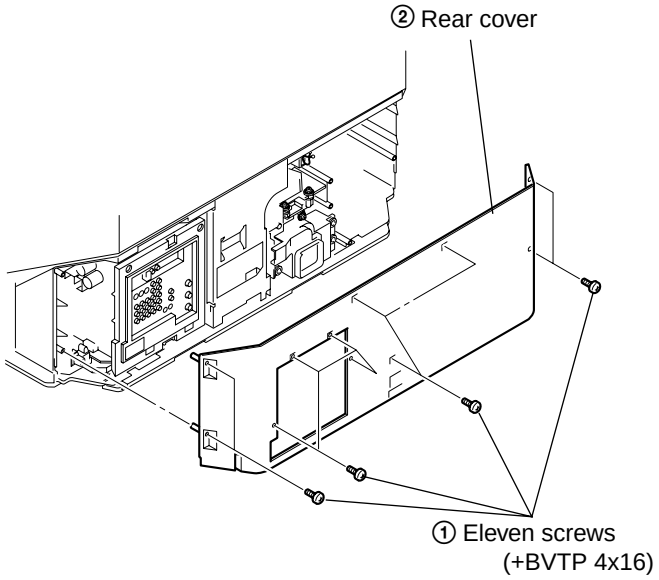

3-2. CENTER PILLAR REMOVAL

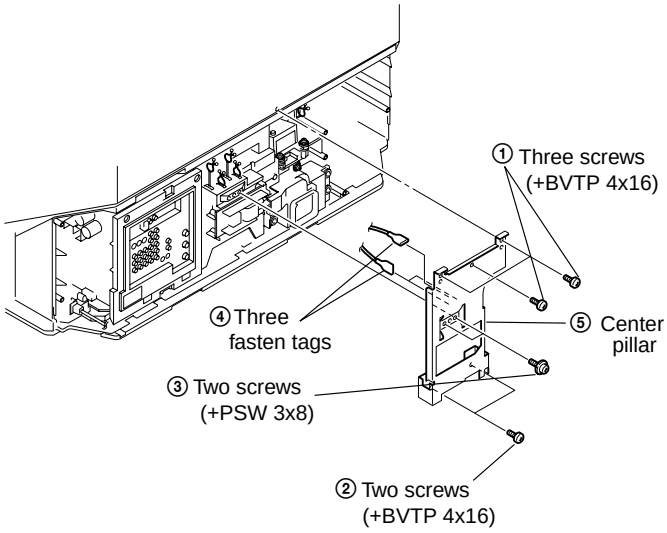

3-3. SERVICE POSITION

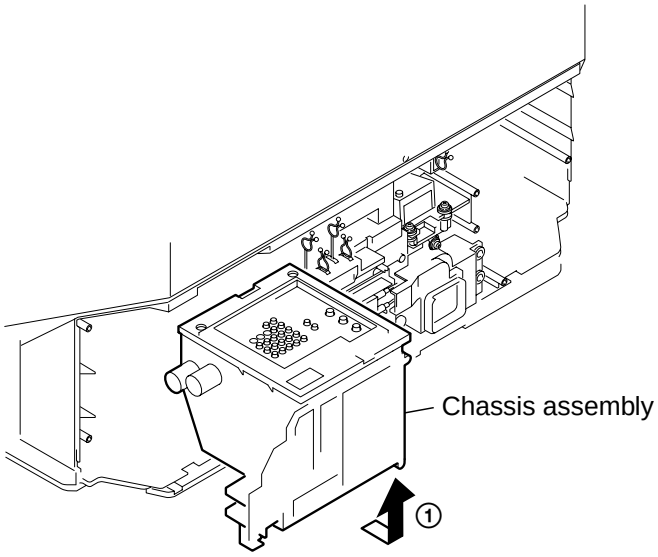

3-4. CHASSIS, OPTICAL UNIT, DC FAN REMOVAL

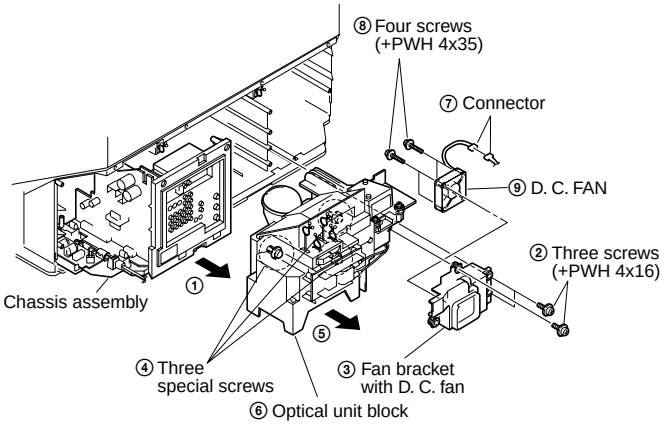

3-5. POWER BLOCK REMOVAL

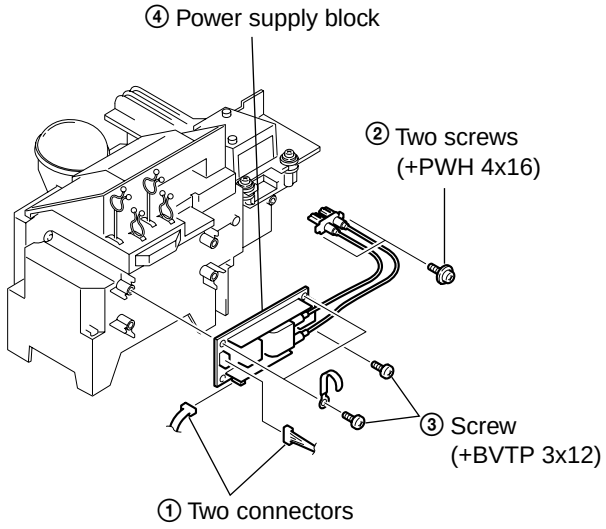

3-6. H1 BOARD REMOVAL

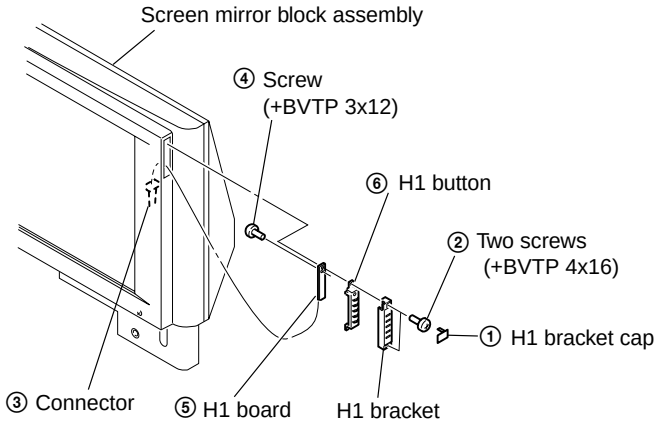

3-7. H2 BOARD REMOVAL

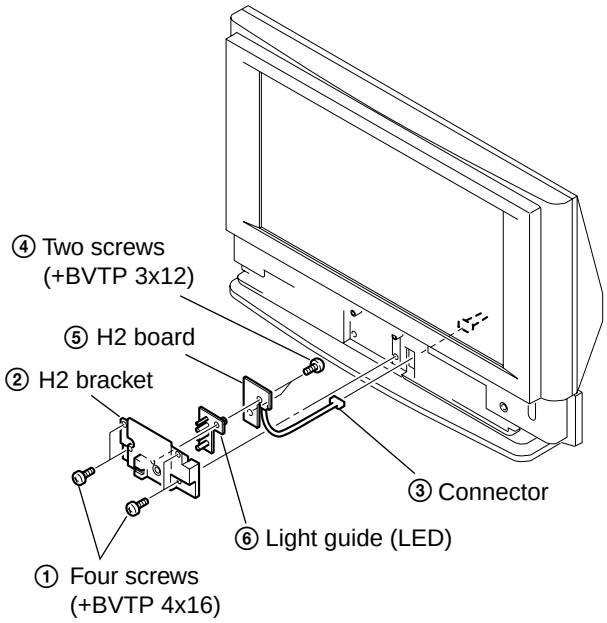

3-8. H3 BOARD REMOVAL

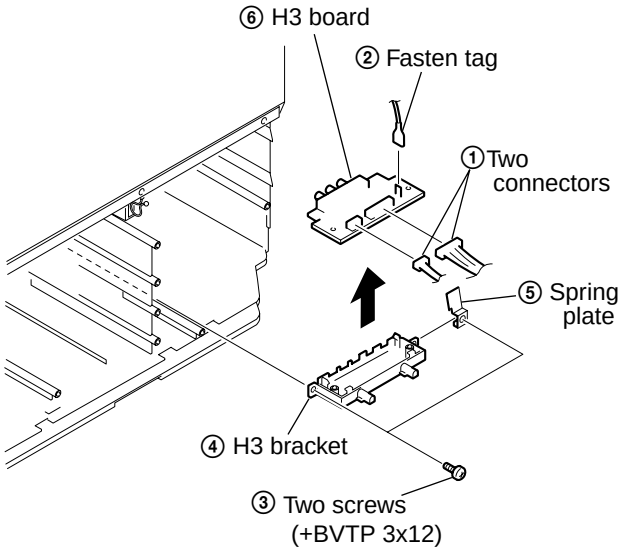

3-9. A BOARD REMOVAL

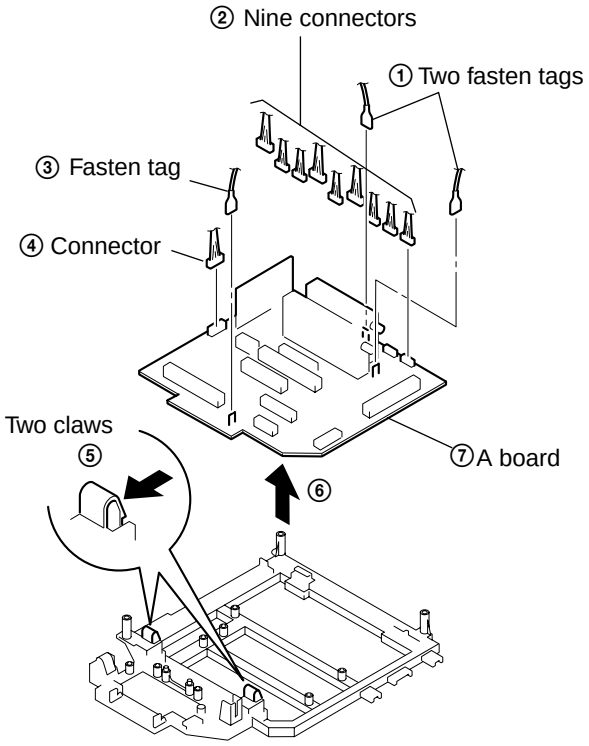

3-10. G BOARD REMOVAL

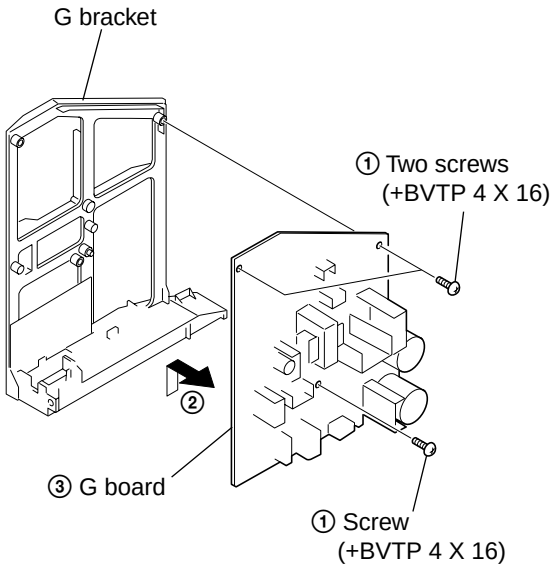

3-11. T BOARD REMOVAL

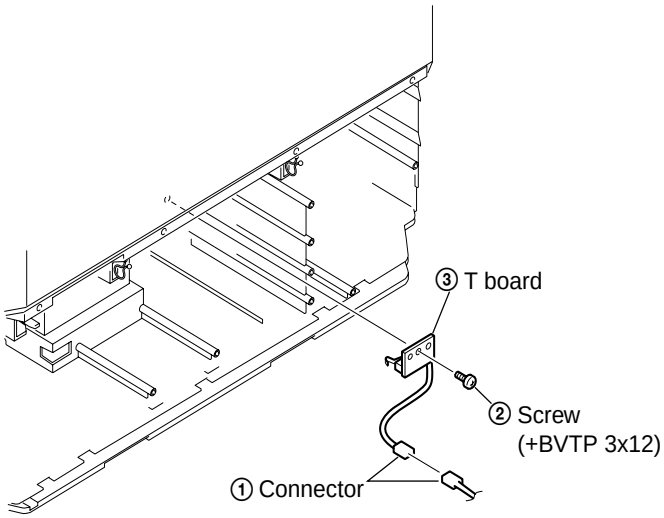

3-12. FRONT PANEL REMOVAL

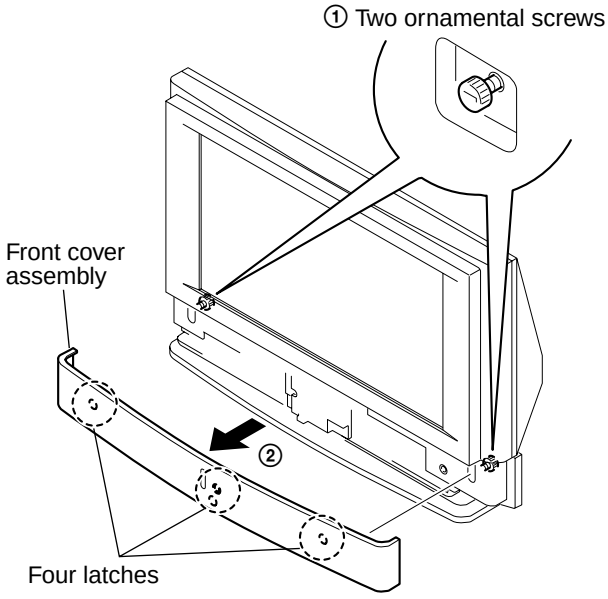

3-13. FRONT COVER REMOVAL

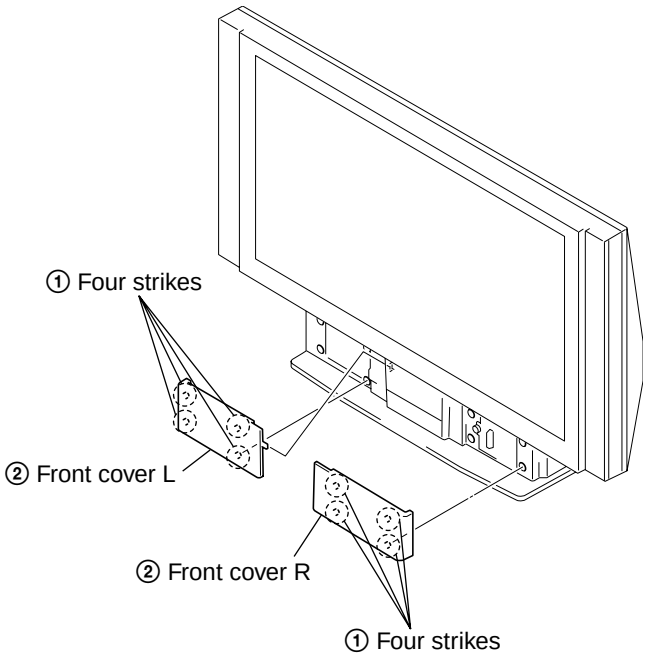

3-14. CONTROL PANEL REMOVAL

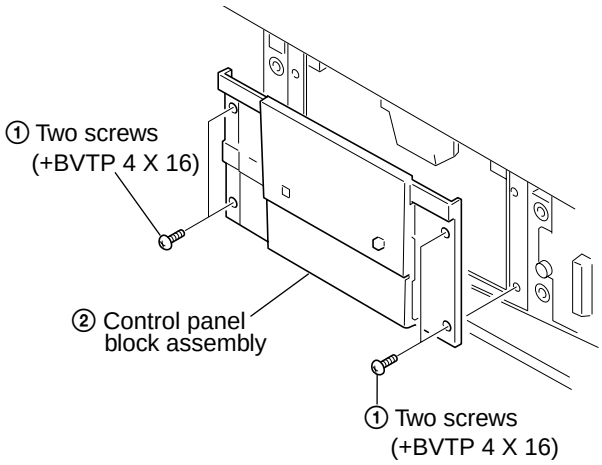

3-15. SCREEN, MIRROR BLOCK ASSEMBLY REMOVAL

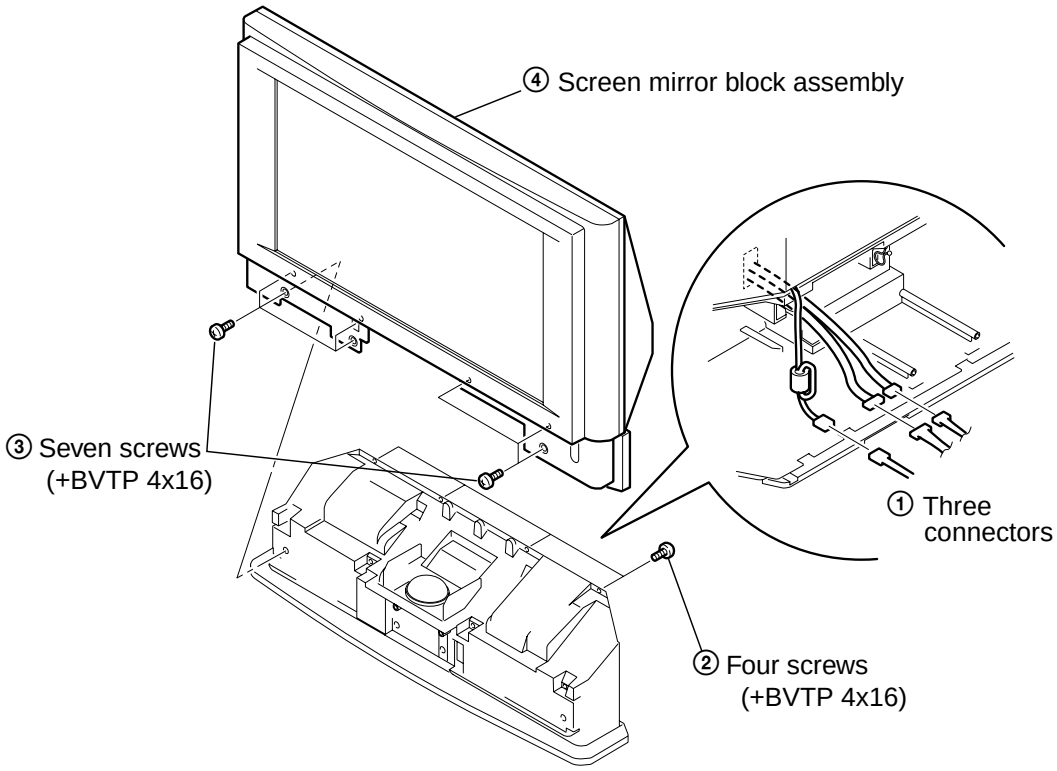

3-16. MIRROR COVER BLOCK ASSEMBLY REMOVAL

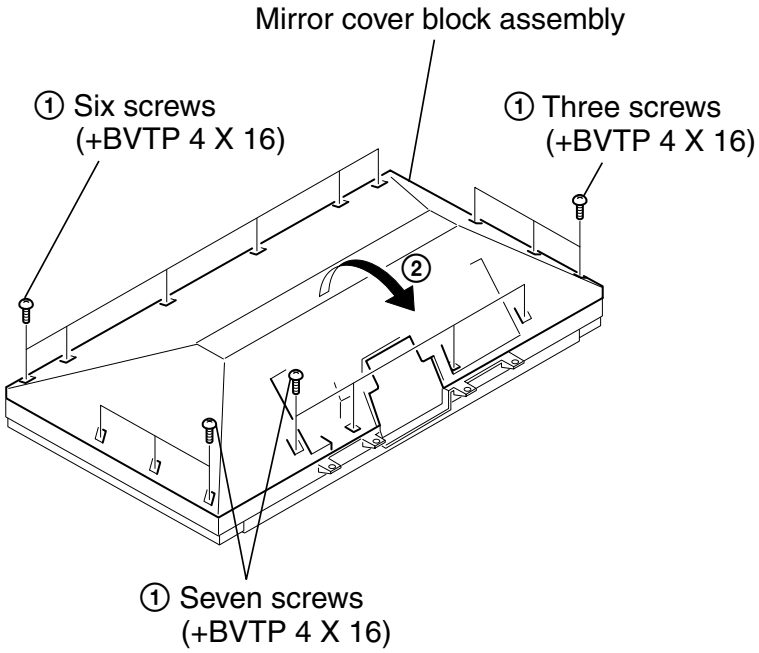

3-17. CONTRAST SCREEN, DIFFUSION PLATE REMOVAL

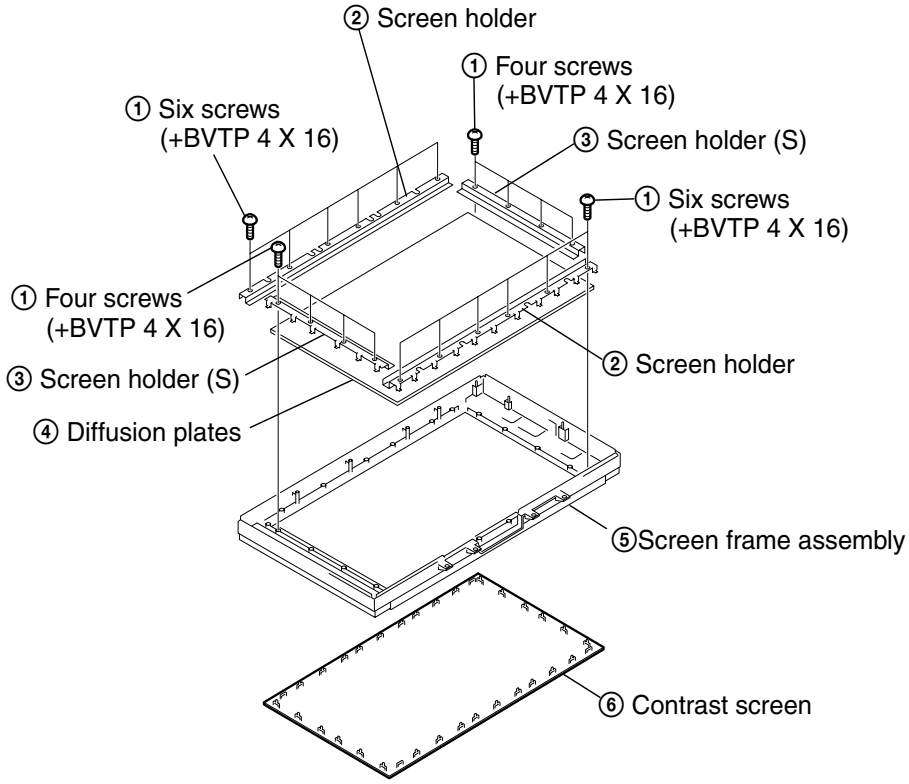

3-18. WOOFER BLOCK ASSEMBLY REMOVAL

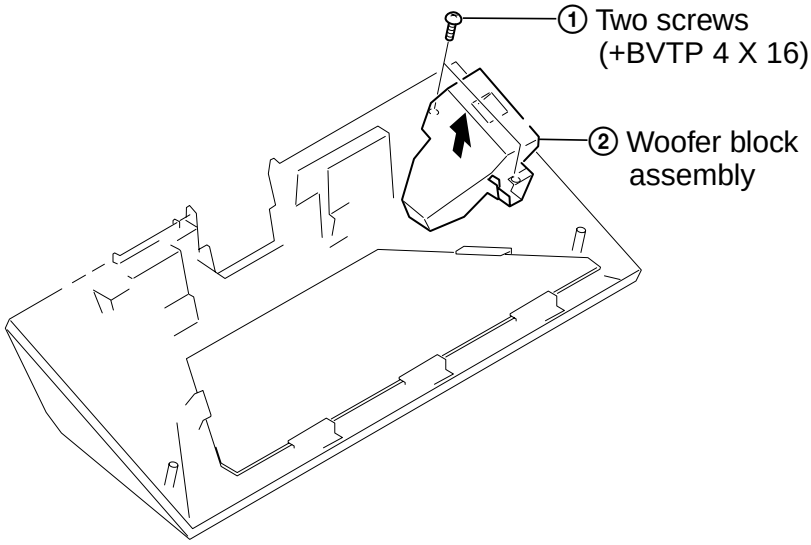

3-19. SPEAKER REMOVAL

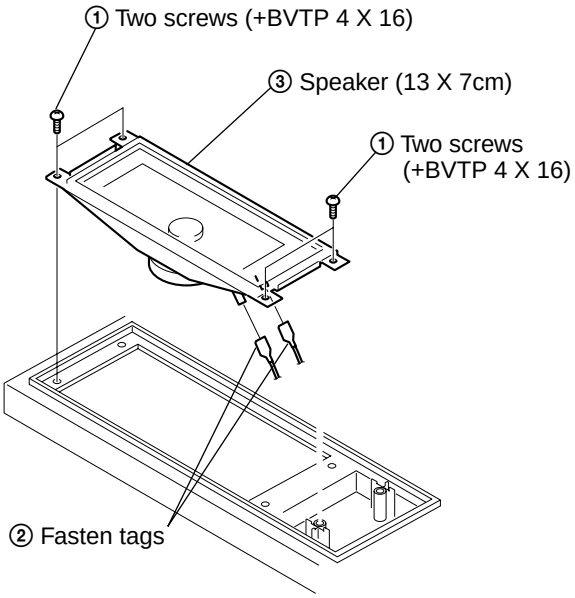

3-20. MIRROR REMOVAL

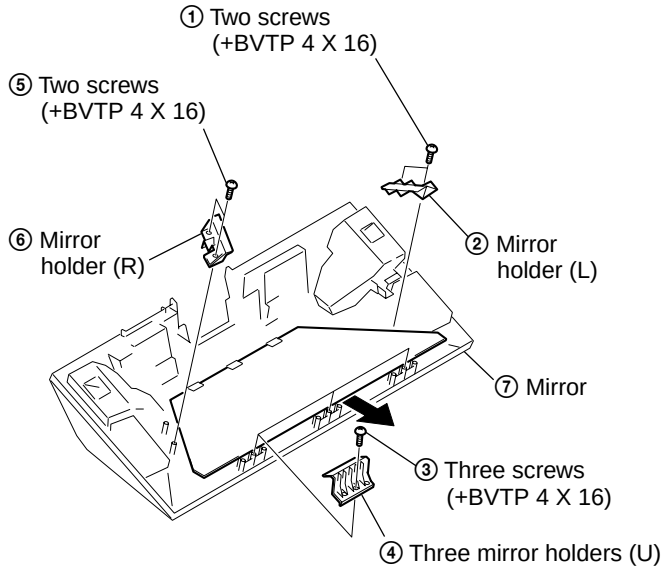

SECTION 4 ELECTRICAL ADJUSTMENTS

4-1. Adjustments with Commander

Service adjustments to this model can be performed using the supplied remote Commander RM-906.

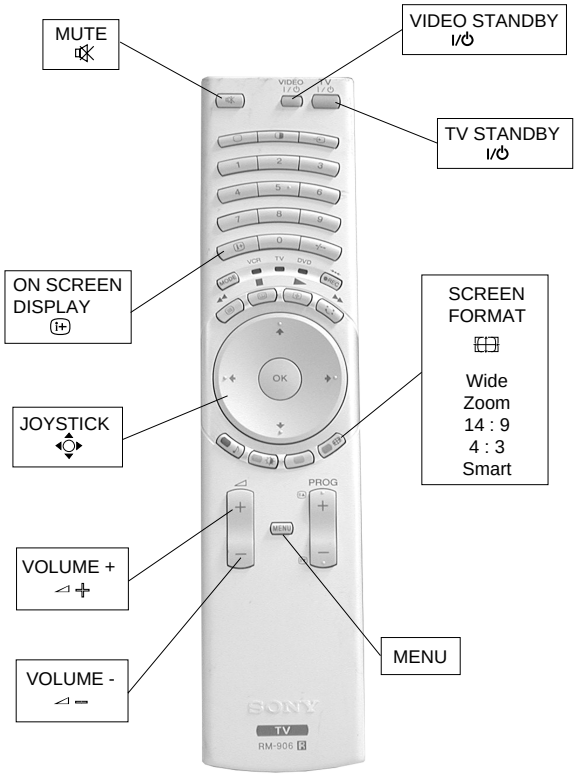

4-1-1. How to Select Each Mode

1. Selection of Mode Between PAL and NTSC

PAL mode : Enter PAL signal.
NTSC mode : Enter NTSC signal. (VIDEO input only)

2. Selection of Screen Format

1. Press '⊟ (BLUE)' button on the commander to select a different screen format '14 : 9' , '4 : 3' etc.

4-1-2. Programming the Remote Commander for Operation in Service Mode

1. Press the VCR/TV/DVD button until the TV LED lights.
2. Press and hold the yellow button for approx. 5 seconds until the TV LED flashes quickly.
3. Press 99999. All three LED's should light.
   The remote commander is now set to Service Mode.
4. To return the remote commander to normal operation mode repeat steps 1. and 2. then press 00000. All three LED's should light.
   The remote commander is now set to normal mode.

4-1-3. Setting the TV into Service Mode

1. Program the remote commander for operation in Service Mode as described above.
2. Turn on the TV main power switch.
3. Press the video standby button on the remote commander twice.
   'TT ‗' will appear in the upper right corner of the screen.
   Other status information will also be displayed.
4. Press 'MENU' on the remote commander to obtain the following menu on the screen.

Service Main Menu:LE4 (v3.39)	NVM VERSION FFH
Service ▶ Design Error	
Select: ▲ ▼ Select Item: ▶	

5. Move to the corresponding adjustment item using the up or down arrow buttons on the Remote Commander.
6. Press the right arrow button to enter into the required menu item.
7. Press the 'Menu' button on the Remote Commander to quit the Service Mode when all adjustments have been completed.

Note :

· After carrying out the service adjustments, to prevent the customer accessing the 'Service Menu' switch the TV set OFF and then ON.

4-1-4. Screen Display for Service Menu

Service		
Display ▶ Picture Audio		
Select: ▲ ▼	Select Item: ▶	Previous Menu: ◀

Display

Display adjustment ▶
OSD adjustment
Temperature control

Select: ▲ ▼ Select Item: ▶ Previous Menu: ◀

Display adjustment

Description	(min,max)	Default	Value	
HORIZONTAL ADJ	(0,2047)	0	0	▶
VERTICAL ADJ	(0,1023)	0	0	

Select: ▲ ▼ Select Item: ▶ Previous Menu: ◀

Picture

Picture settings ▶
White balance

Select: ▲ ▼ Select Item: ▶ Previous Menu: ◀

Picture settings

Description	(min,max)	Default	Value	
FLAT_POINT	(0,100)	70	35	▶
PK_RATIO	(0,15)	0	0	
SUB_COLOUR_PAL_NTSC	(0,63)	32	32	
SUB_COLOUR_SECAM	(0,63)	32	32	
BRIGHT_MAX	(0,255)	255	255	
BRIGHT_MIN	(0,255)	10	10	
CONTRAST_MAX	(0,255)	50	50	
CONTRAST_MIN	(0,255)	0	0	

Select: ▲ ▼ Select Item: ▶ Previous Menu: ◀

Audio

BBE OFF mode ▶
BBE Natural/V.Dolby offsets
BBE Dynamic offsets
BBE Cinema offsets
Subwoofer level adjustments
Audio detection thresholds

Select: ▲ ▼ Select Item: ▶ Previous Menu: ◀

BBE OFF mode

Description	(min,max)	Default	Value	
SW_FREQ_OFF	(5,40)	20	20	▶
BAND1_OFF_OFFSET	(-96,96)	0	0	
BAND2_OFF_OFFSET	(-96,96)	0	0	
BAND3_OFF_OFFSET	(-96,96)	0	0	
BAND4_OFF_OFFSET	(-96,96)	0	0	
BAND5_OFF_OFFSET	(-96,96)	0	0	
BBE_LOUDNESS_OFF	(0,68)	0	0	

Select: ▲ ▼ Select Item: ▶ Previous Menu: ◀

White balance

Description	(min,max)	Default	Value	
R_GAIN	(0,255)	160	150	▶
G_GAIN	(0,255)	160	136	
B_GAIN	(0,255)	160	131	
R_BIAS	(0,255)	80	92	
G_BIAS	(0,255)	80	80	
B_BIAS	(0,255)	80	83	
R_WARM_GAIN_OFF	(-128,127)	0	0	
G_WARM_GAIN_OFF	(-128,127)	0	0	
B_WARM_GAIN_OFF	(-128,127)	0	0	
R_WARM_BIAS_OFF	(-128,127)	0	0	
G_WARM_BIAS_OFF	(-128,127)	0	0	
B_WARM_BIAS_OFF	(-128,127)	0	0	
R_COLD_GAIN_OFF	(-128,127)	0	0	
G_COLD_GAIN_OFF	(-128,127)	0	0	
B_COLD_GAIN_OFF	(-128,127)	0	0	
R_COLD_BIAS_OFF	(-128,127)	0	0	
G_COLD_BIAS_OFF	(-128,127)	0	0	
B_COLD_BIAS_OFF	(-128,127)	0	0	
R_SECAM_GAIN_OFF	(-128,127)	0	0	
G_SECAM_GAIN_OFF	(-128,127)	0	0	
B_SECAM_GAIN_OFF	(-128,127)	0	0	
R_SECAM_BIAS_OFF	(-128,127)	0	0	
G_SECAM_BIAS_OFF	(-128,127)	0	0	
B_SECAM_BIAS_OFF	(-128,127)	0	0	

Select: ▲ ▼ Select Item: ▶ Previous Menu: ◀

Design

CXA2149 - AVSwitch Device ▶
MSP3411 - Sound Processor Device
TDA988x - IF Device
TUA60xx - PLL Device
VSP9427 - Video Processor Device
CXA2019 - Chroma Decoder
CXD3804 - 3D Comb Filter
DPS9450A - Digital Processor and Scaler Device
CXD9671GG - Digital Gamma Device
CXA7001R - LCD Driver Device

Select: ▲ ▼ Select Item: ▶ Previous Menu: ◀

Error monitor

WORKING TIME: **(Hours:Minutes)** 82:33

Error counters:

E02:	LAMP COV	45
E03:	LAMP PROT	8
E04:	FAN PROT	55
E05:	TEMP PROT	0
E06:	IIC	0
E07:	NVM	0
E09:	TUNER	2
E10:	SOUND	0
E12:	SCANRATE	4
E14:	BACKEND	2
E17:	AVSWITCH	10
E22:	DIGITAL GAMMA	3
E23:	LCD Drivers	6
E24:	SPEAKER PROT	0

Select: ▲ ▼ Previous Menu: ◀

4-1-5. Operation Method for Adjustments

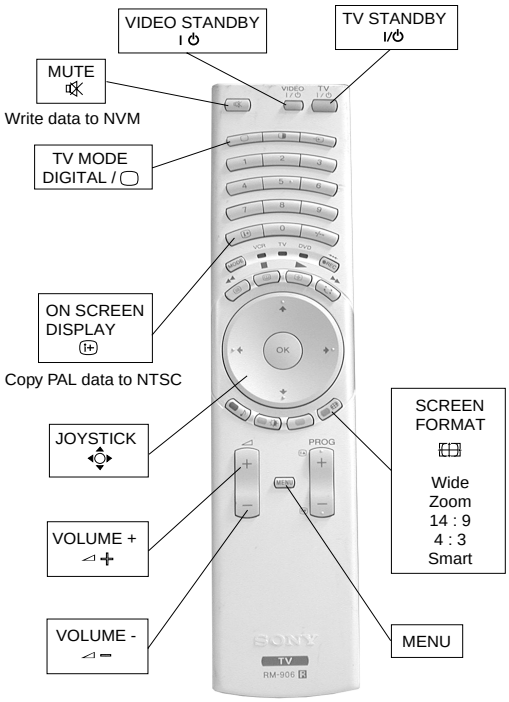

1. Functions of Keys on Commander

- ▲▼◄►: Changes data value. (up or down)
  : Marker moves up, down, or to the left or right.
  (in fine adjustment mode)
- (OK) : Switches marker moving method.
  (in fine adjustment mode)
  joystick (▲, ▼, ◄, ►) keys ➔ ① and ④ buttons

4-2. Screen Center Adjustment

1. Input a monoscope PAL signal in wide mode.
2. Go into the Service mode; Display adjustment.
3. For Horizontal adjustment; modify to centre left-right.
4. For Vertical adjustment; modify to centre up-down.
5. Display PC input with XGA 60Hz resolution.
6. Check picture is not hidden on the top.

4-3. TEST-TEST MODE

Is available by programming the Remote Commander for operation in Service Mode [As shown on Page 27] then pressing the VIDEO button twice, OSD 'TT' appears. The functions describe below are available by selecting the two numbers. To release 'Test Test Mode', press 00, or switch the TV into Stand-by mode.

00	'TT' mode off
01	Set picture level to maximum
02	Set picture level to minimum
03	Set Volume to 35%
04	Set Volume to 50%
05	Set Volume to 65%
06	Set Volume to 80%
07	Ageing mode on
08	Shipping Condition
11	Sub Picture adjustment
12	Sub Colour adjustment
13	Sub Brightness adjustment
15	Rotation coil test
16	Picture level 50%
19	Factory Mode Enable/Disable
21	Destination ADEKR
22	Destination BL
24	Destination U
31	Inches selection (50/60 inches)
32	Memory Stick enable flag
33	Hor-Ver LCD adjustment
34	RPJ selector flag
35	Wide model slection
36	VM off/on test
39	Direct access to auto tuning
42	Subwoofer test
43	Select Dual A sound
44	Select Dual B sound
45	Select Mono sound
46	Select Stereo sound
49	Set NVM as virgin
53	FM Overmodulation enable/disable
58	Memory Stick test
62	AM from baseband enable/disable
73	Enable Zweiton D/K2 system (6.5/6.74)
74	Enable Zweiton D/K3 system (6.5/6.74)
78	Balance full left
79	Balance full right
87	Local keys test
91	Set 14:9 zoom mode
93	Set 16:9 zoom mode
94	Set ZOOM zoom mode
95	Set 4:3 zoom mode
96	Set Smart zoom mode (for FX66)
99	Display Error and Working Time menu

MEMO

5-1. BLOCK DIAGRAMS (1)

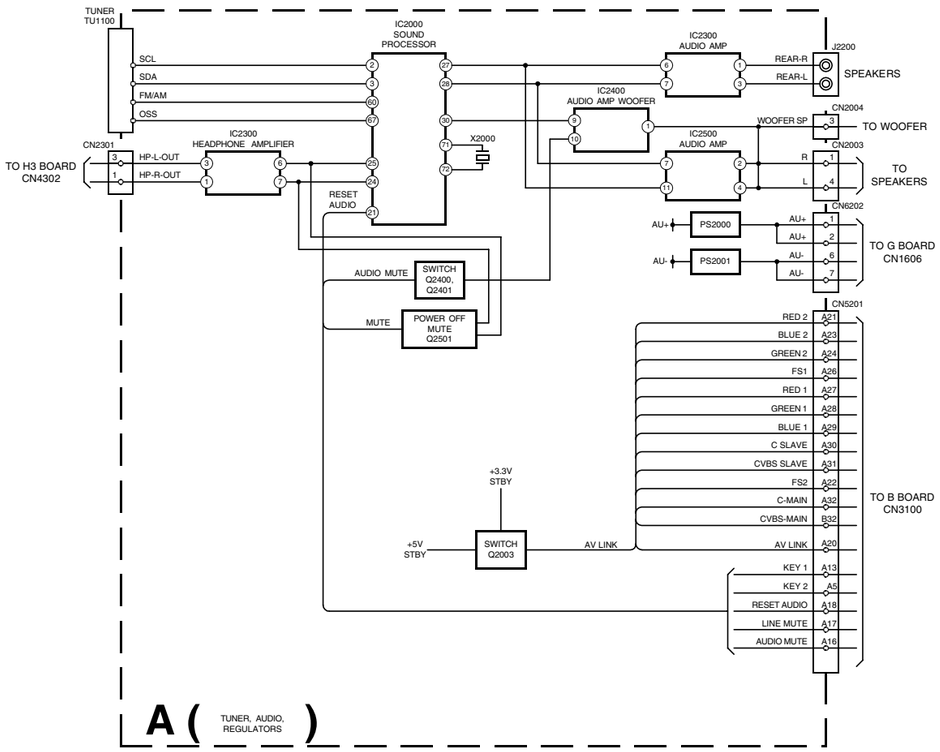

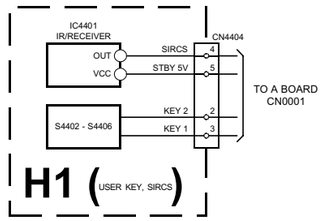

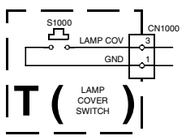

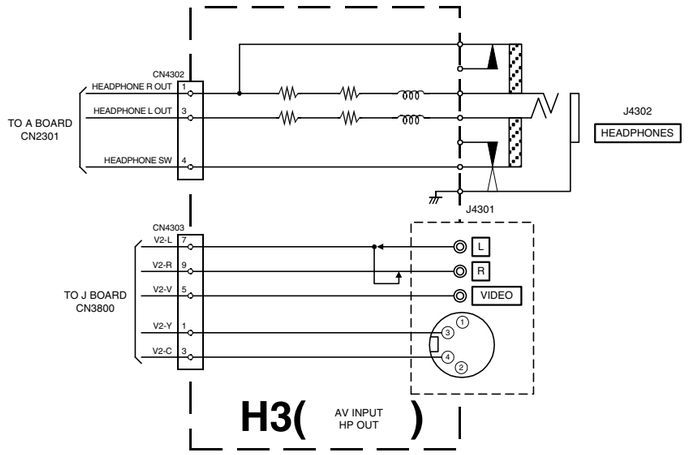

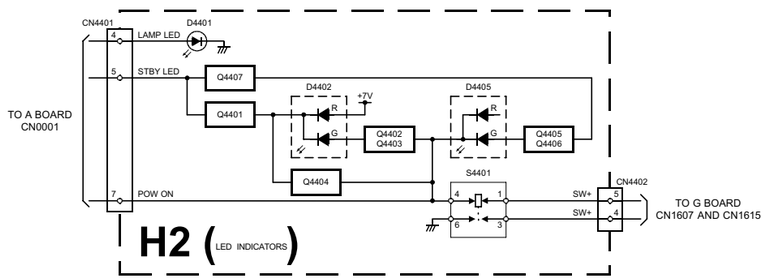

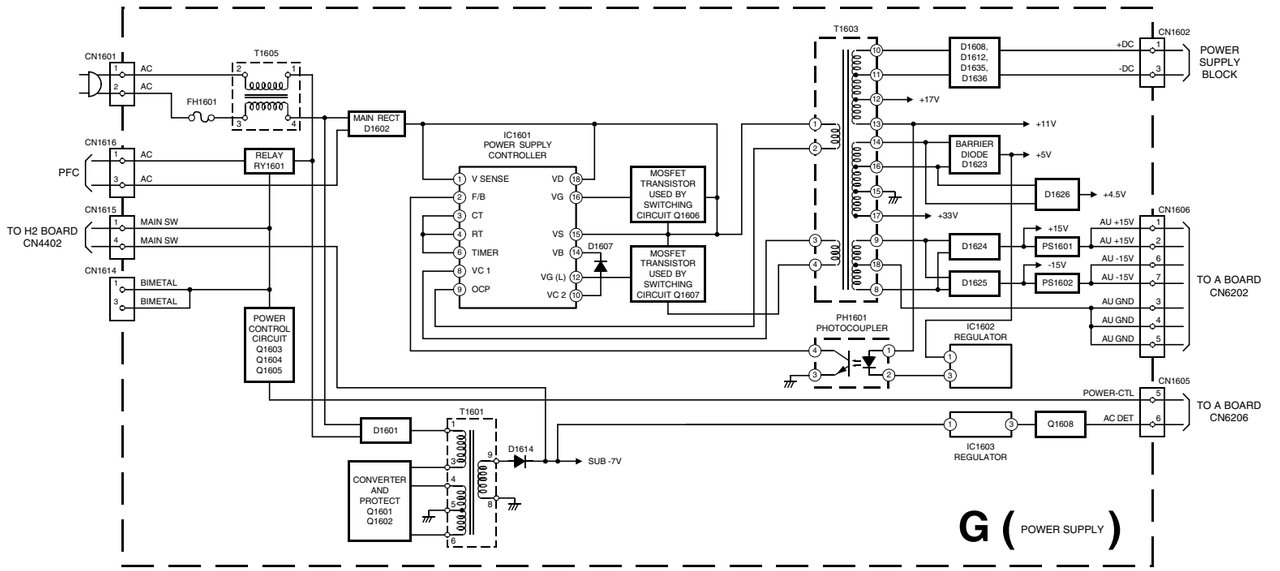

5-1. BLOCK DIAGRAMS (2)

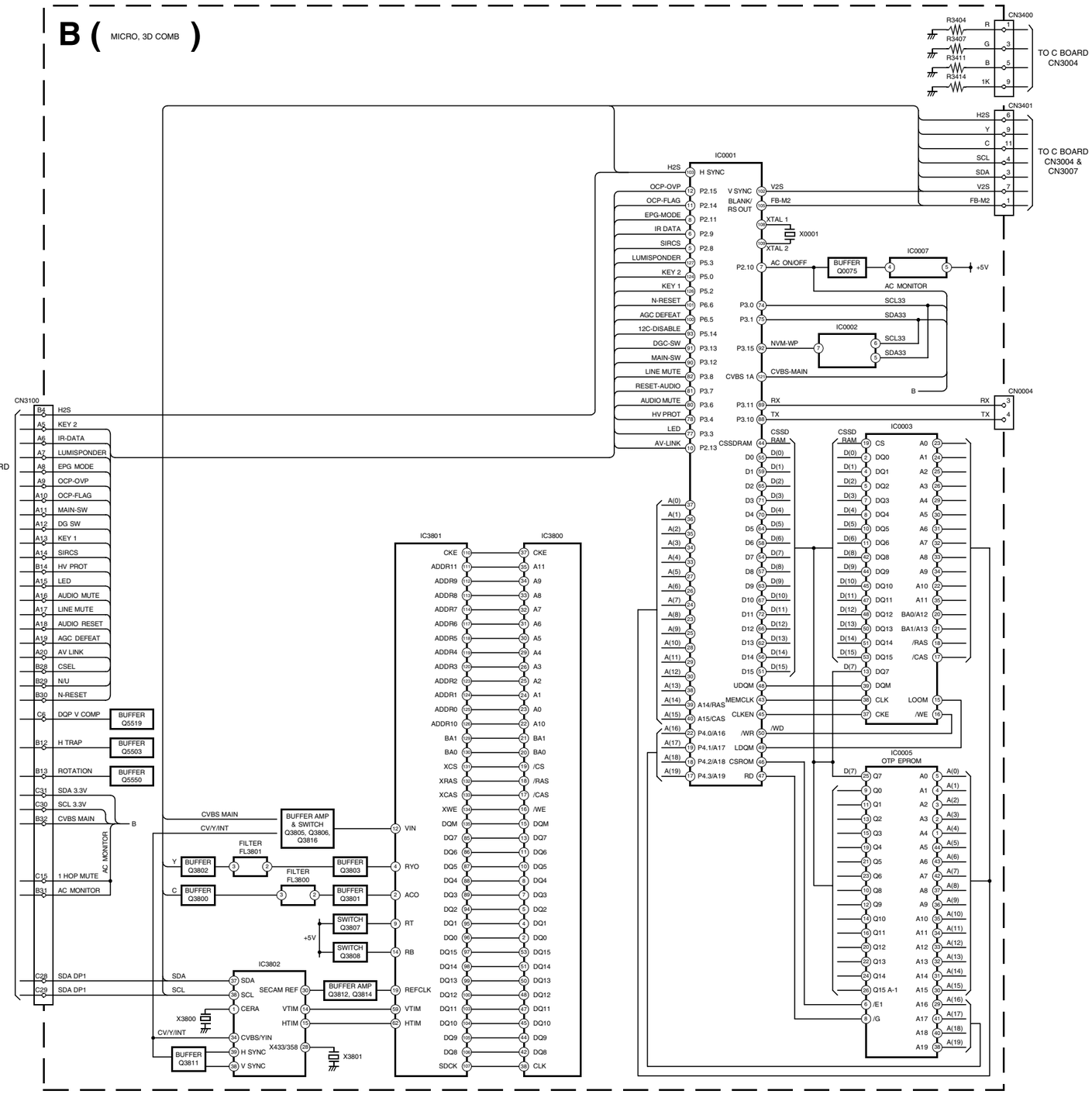

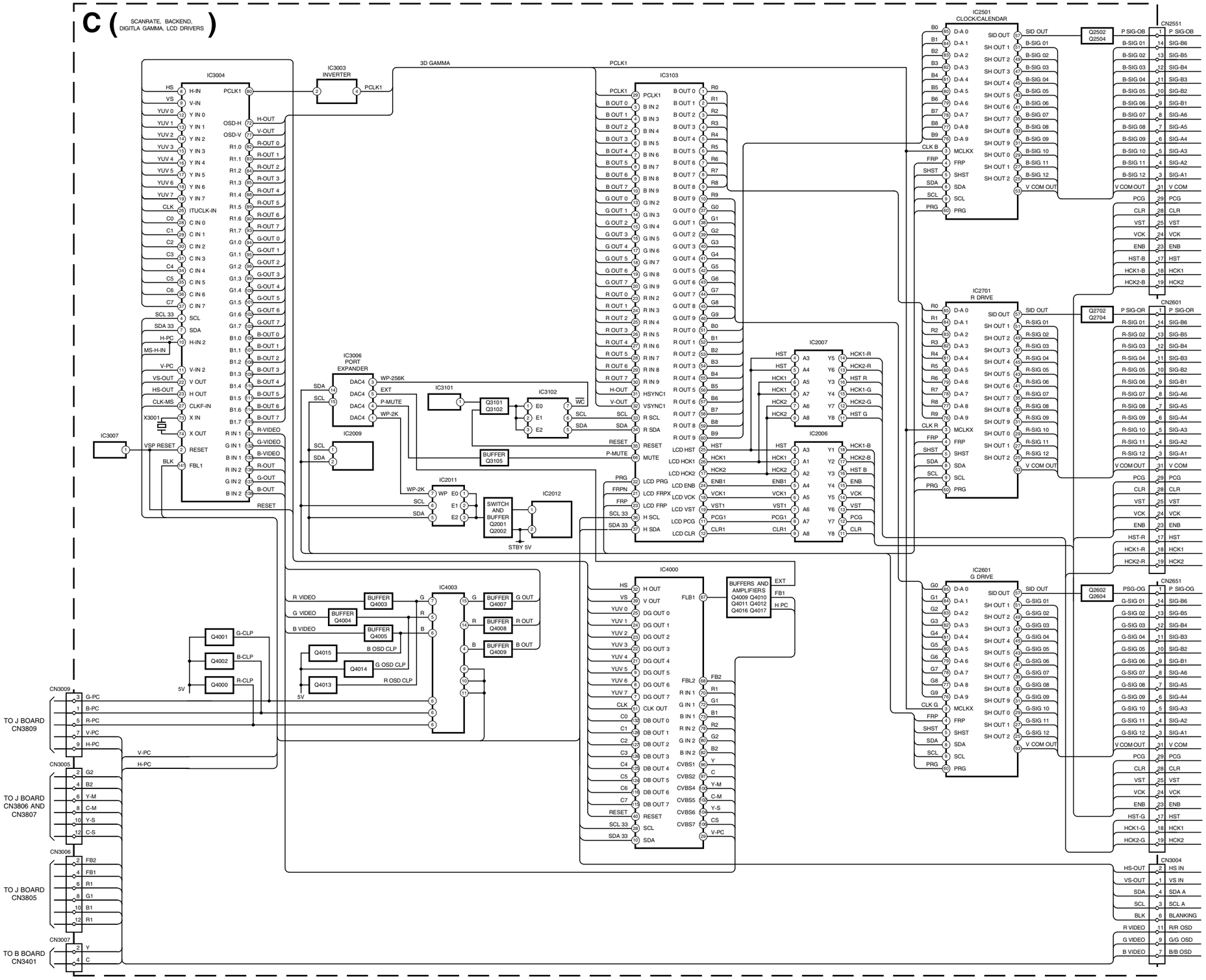
C (SCANRATE, BACKEND, DIGITLA GAMMA, LCD DRIVERS)
IC3004
IC3003 INVERTER
3D GAMMA
PCLK1
IC3103
IC2501 CLOCK/CALENDAR
CN2551
IC2701 R DRIVE
CN2601
IC2601 G DRIVE
CN2651
IC3006 PORT EXPANDER
IC2009
IC3101
IC3102
IC2007
IC2006
IC2011
IC2012
IC4003
IC4000
IC3007
Q3101 Q3102
BUFFER Q3105
SWITCH AND BUFFER Q2001 Q2002
STBY 5V
Q2502 Q2504
Q2702 Q2704
Q2602 Q2604
BUFFERS AND AMPLIFIERS Q4009 Q4010 Q4011 Q4012 Q4016 Q4017
BUFFER Q4003
BUFFER Q4004
BUFFER Q4005
BUFFER Q4007
BUFFER Q4008
BUFFER Q4009
Q4001
Q4002
Q4000
Q4015
Q4014
Q4013
CN3009
CN3005
CN3006
CN3007
CN3004
TO J BOARD CN3809
TO J BOARD CN3806 AND CN3807
TO J BOARD CN3805
TO B BOARD CN3401

5-1. BLOCK DIAGRAMS (4)

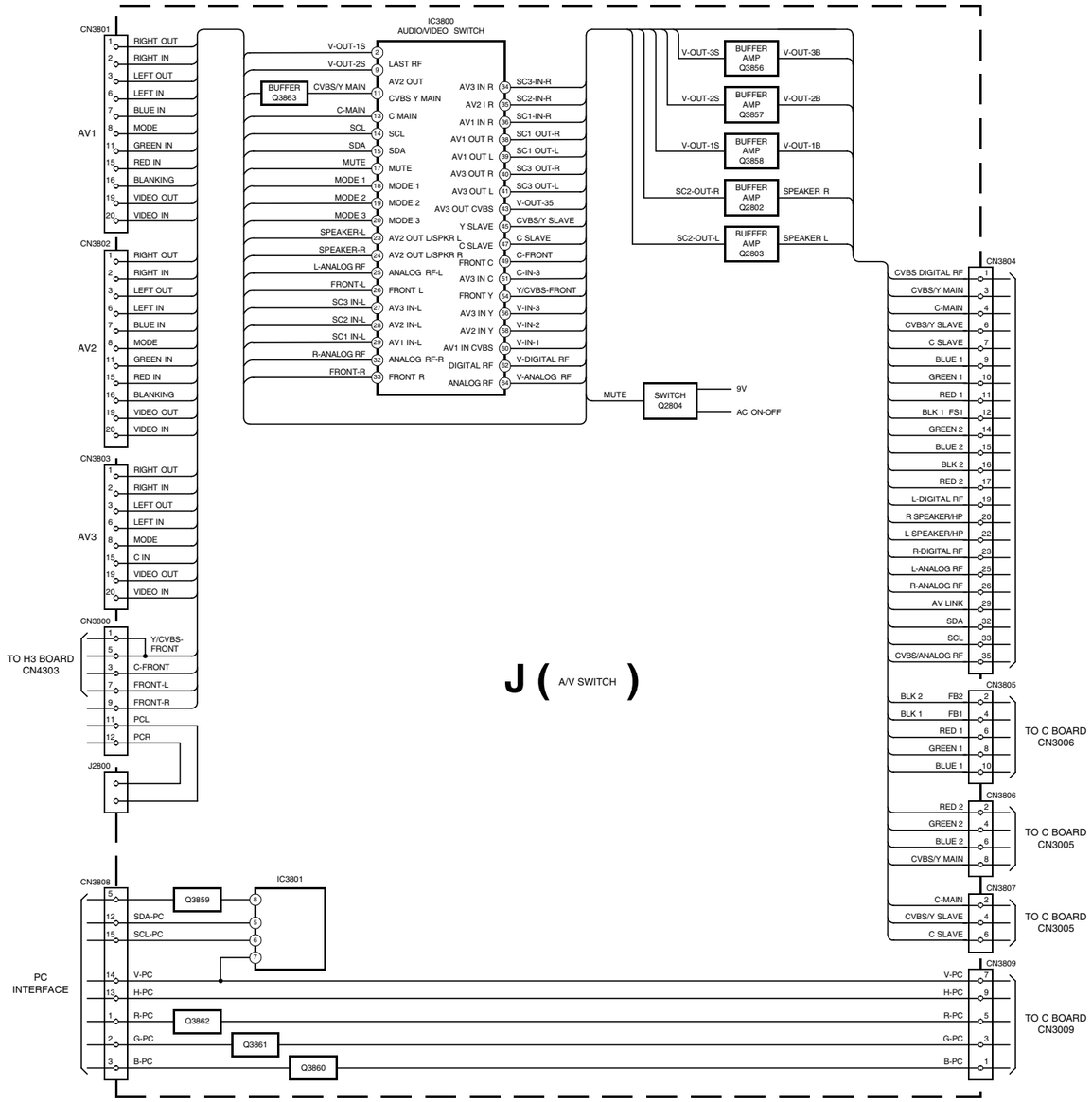

5-2. CIRCUIT BOARD LOCATION

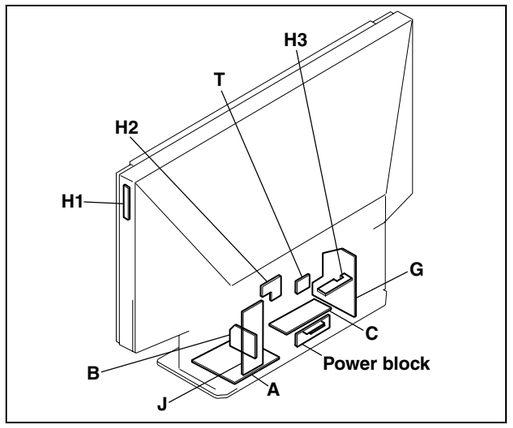

5-3. SCHEMATIC DIAGRAMS AND PRINTED WIRING BOARDS

Note :

- All capacitors are in µF unless otherwise noted.
- pF : µµF 50WV or less are not indicated except for electrolytic types.
- Indication of resistance, which does not have one for rating electrical power, is as follows.

Pitch : 5mm
Electrical power rating : 1/4W

- Chip resistors are 1/10W
- All resistors are in ohms.
  k = 1000 ohms, M = 1000,000 ohms
- : nonflammable resistor.
- : fusible resistor.
- : internal component.
- : panel designation or adjustment for repair.
- All variable and adjustable resistors have characteristic curve B, unless otherwise noted.
- All voltages are in Volts.
- Readings are taken with a 10Mohm digital mutimeter.
- Readings are taken with a color bar input signal.
- Voltage variations may be noted due to normal production tolerences.
- : B + bus.
- : B - bus.
- : RF signal path.
- : earth - ground.
- : earth - chassis.

Reference Information

RESISTOR	**RN**	: METAL FILM
	RC	: SOLID
	FPRD	: NON FLAMMABLE CARBON
	FUSE	: NON FLAMMABLE FUSIBLE
	RS	: NON FLAMMABLE METAL OXIDE
	RB	: NON FLAMMABLE CEMENT
	RW	: NON FLAMMABLE WIREWOUND
		: ADJUSTMENT RESISTOR
COIL	**LF-8L**	: MICRO INDUCTOR
CAPACITOR	**TA**	: TANTALUM
	PS	: STYROL
	PP	: POLYPROPYLENE
	PT	: MYLAR
	MPS	: METALIZED POLYESTER
	MPP	: METALIZED POLYPROPYLENE
	ALB	: BIPOLAR
	ALT	: HIGH TEMPERATURE
	ALR	: HIGH RIPPLE

Note : The components identified by shading and marked ⚠ are critical for safety. Replace only with the part numbers specified in the parts list.

Note : Les composants identifiés par une trame et par une marque ⚠ sont d'une importance critique pour la sécurité. Ne les remplacer que par des pièces de numéro spécifié. specified.

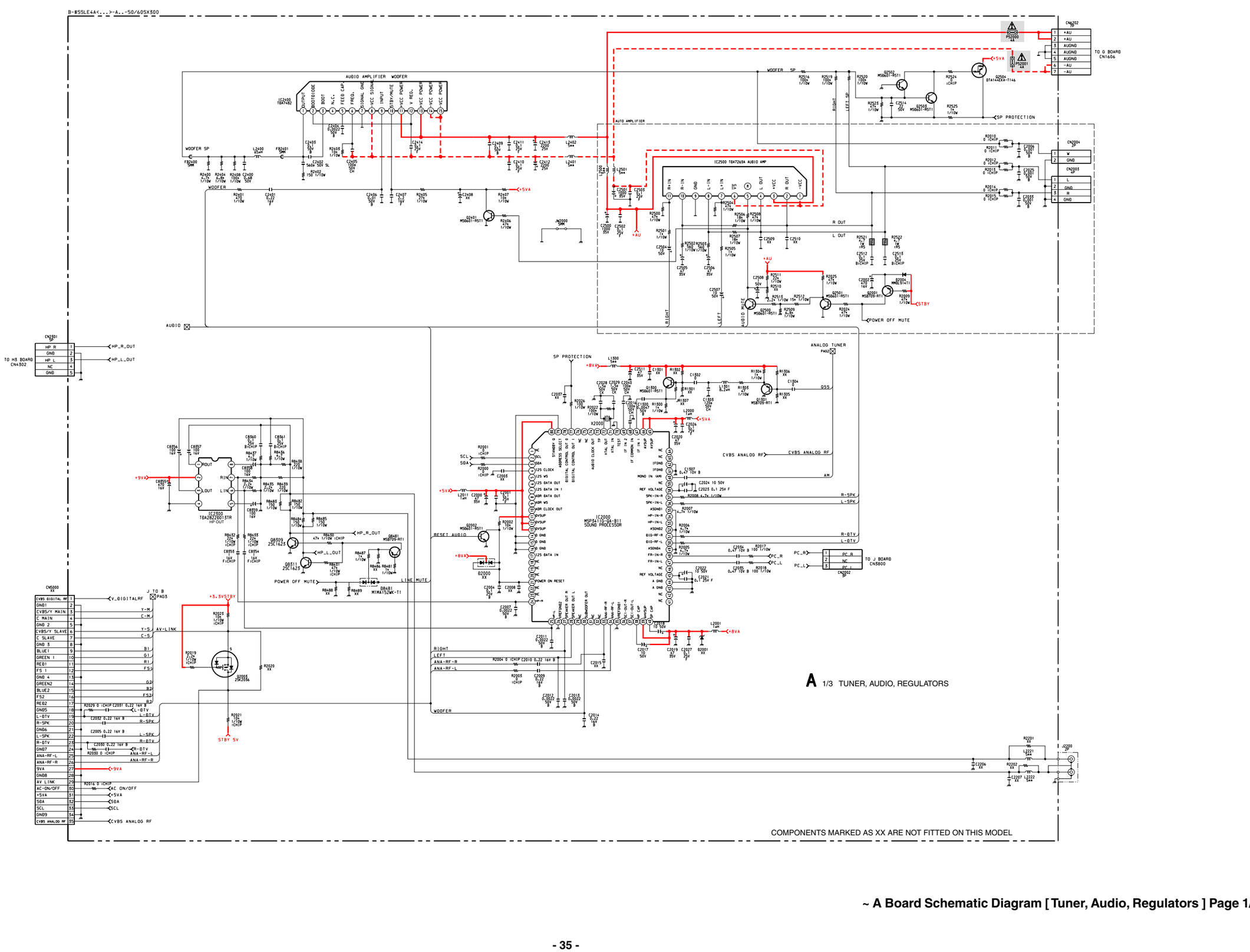

~ A Board Schematic Diagram [Tuner, Audio, Regulators] Page 1/3 ~

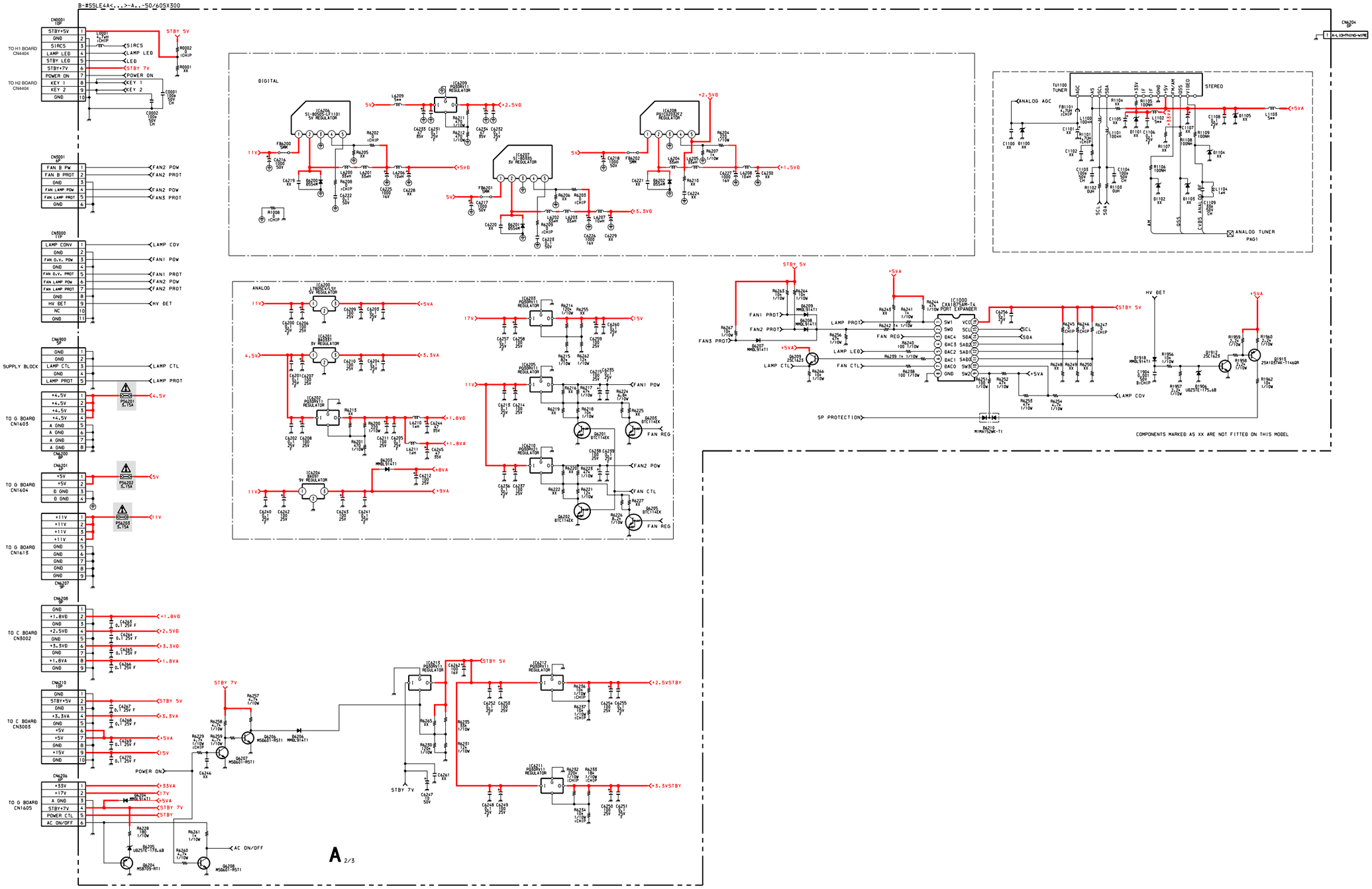

~ A Board Schematic Diagram [Tuner, Audio, Regulators] Page 2/3 ~

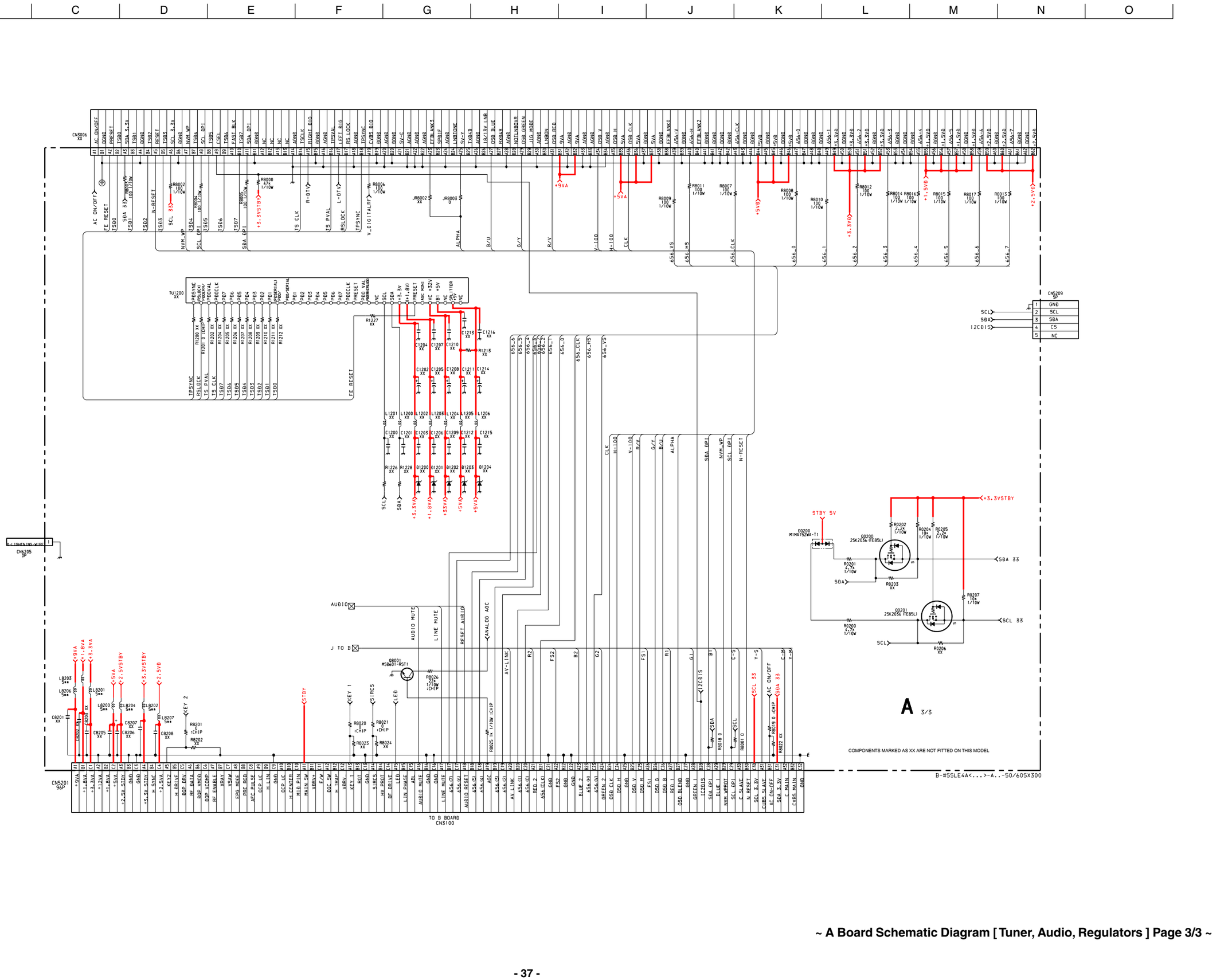
A
3/3
COMPONENTS MARKED AS XX ARE NOT FITTED ON THIS MODEL
B-#SSLE4A<...>-A..-50/60SX300
TO B BOARD
CN5100
CN5209
GND
SCL
SDA
CS
NC
I2C015
STBY 5V
+3.3VSTBY
SDA 33
SCL 33
AC ON/OFF
AUDIO
J TO B
AUDIO MUTE
LINE MUTE
RESET AUDIO
ANALOG AGC
AV-LINK
LED
KEY 1
KEY 2
STBY

~ A Printed Wiring Board Conductor Side ~

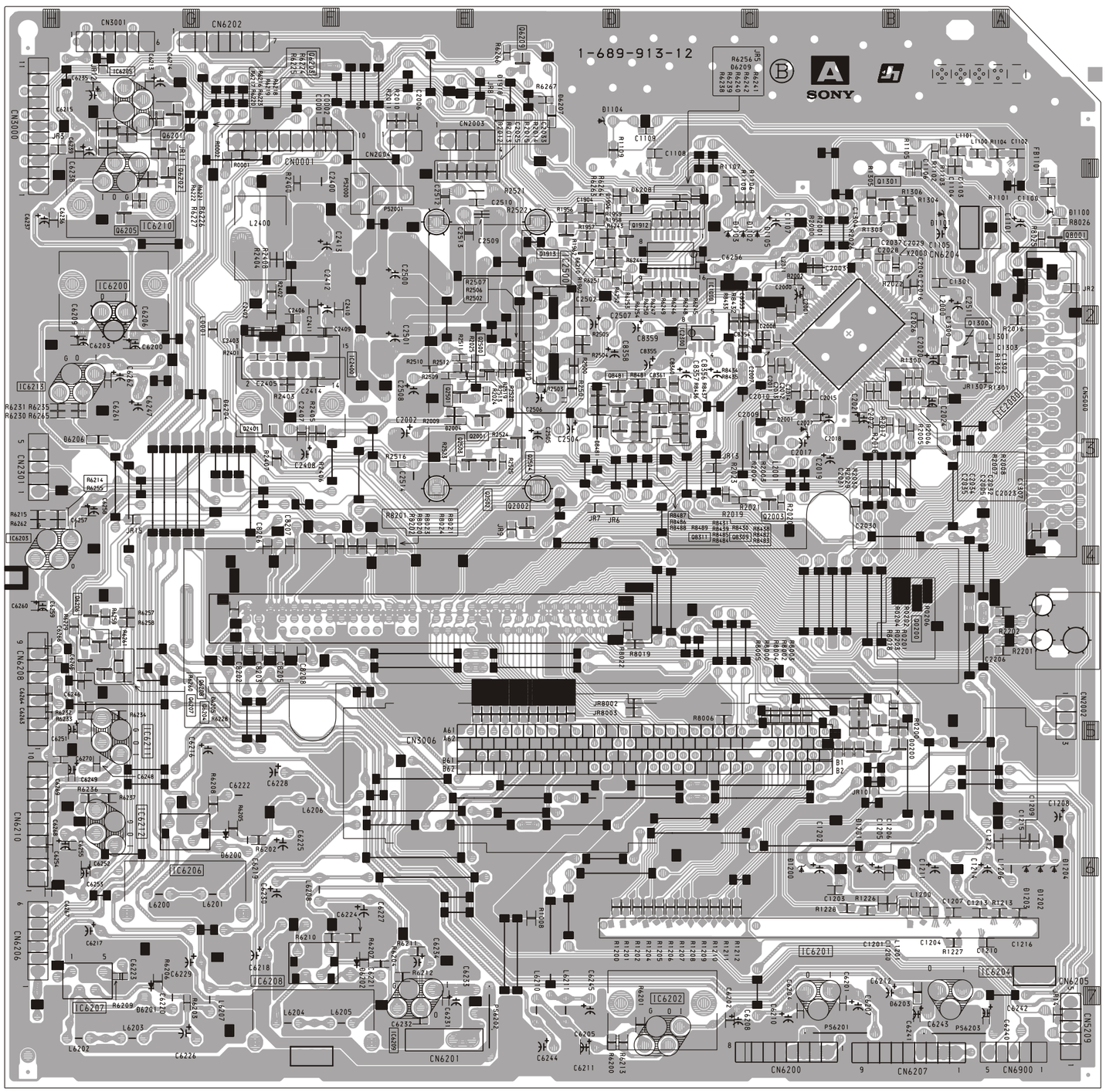

B-#SSLE4A<...>-B, -KF-50/60SX300

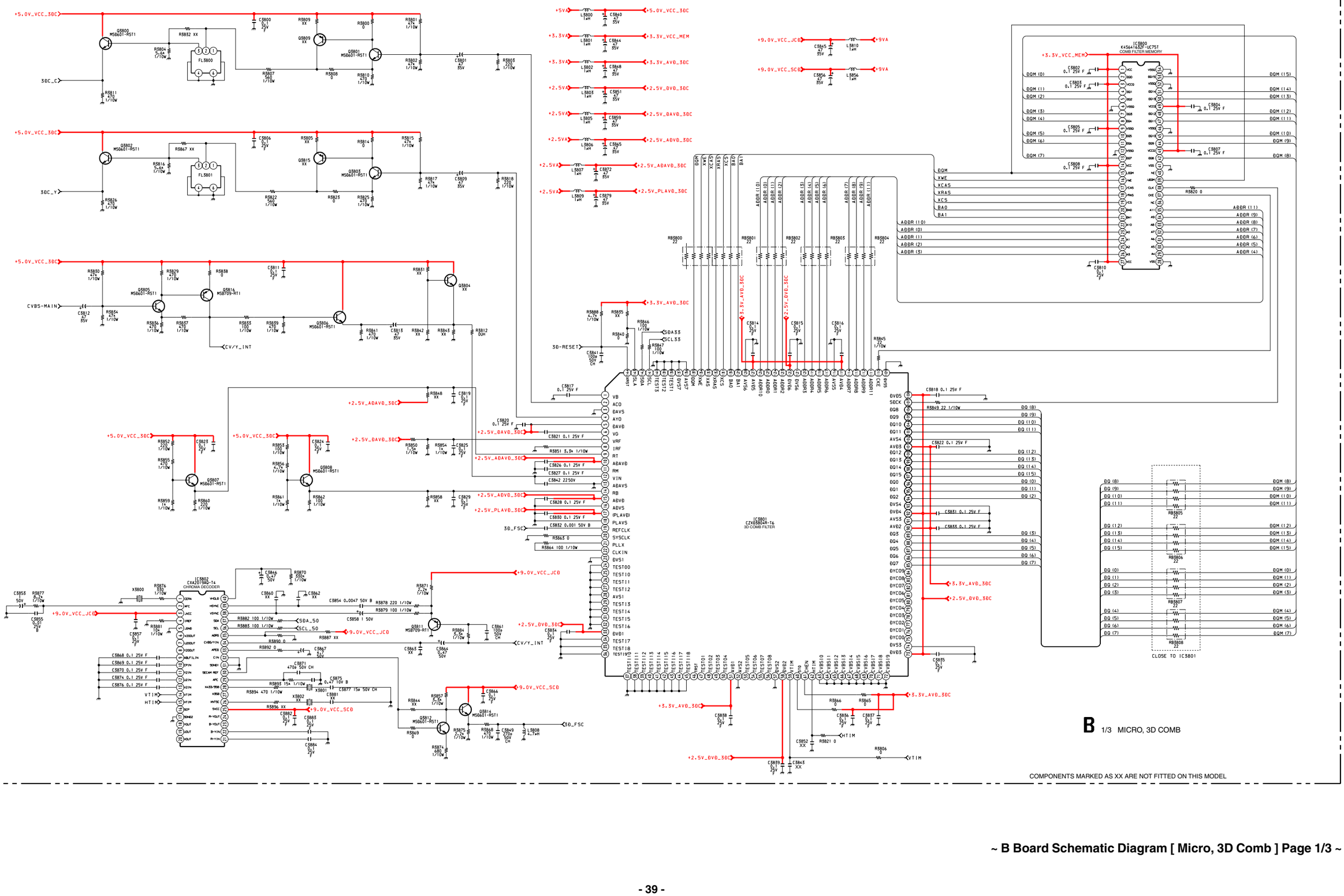

B 1/3 MICRO, 3D COMB

COMPONENTS MARKED AS XX ARE NOT FITTED ON THIS MODEL

~ B Board Schematic Diagram [Micro, 3D Comb] Page 1/3 ~

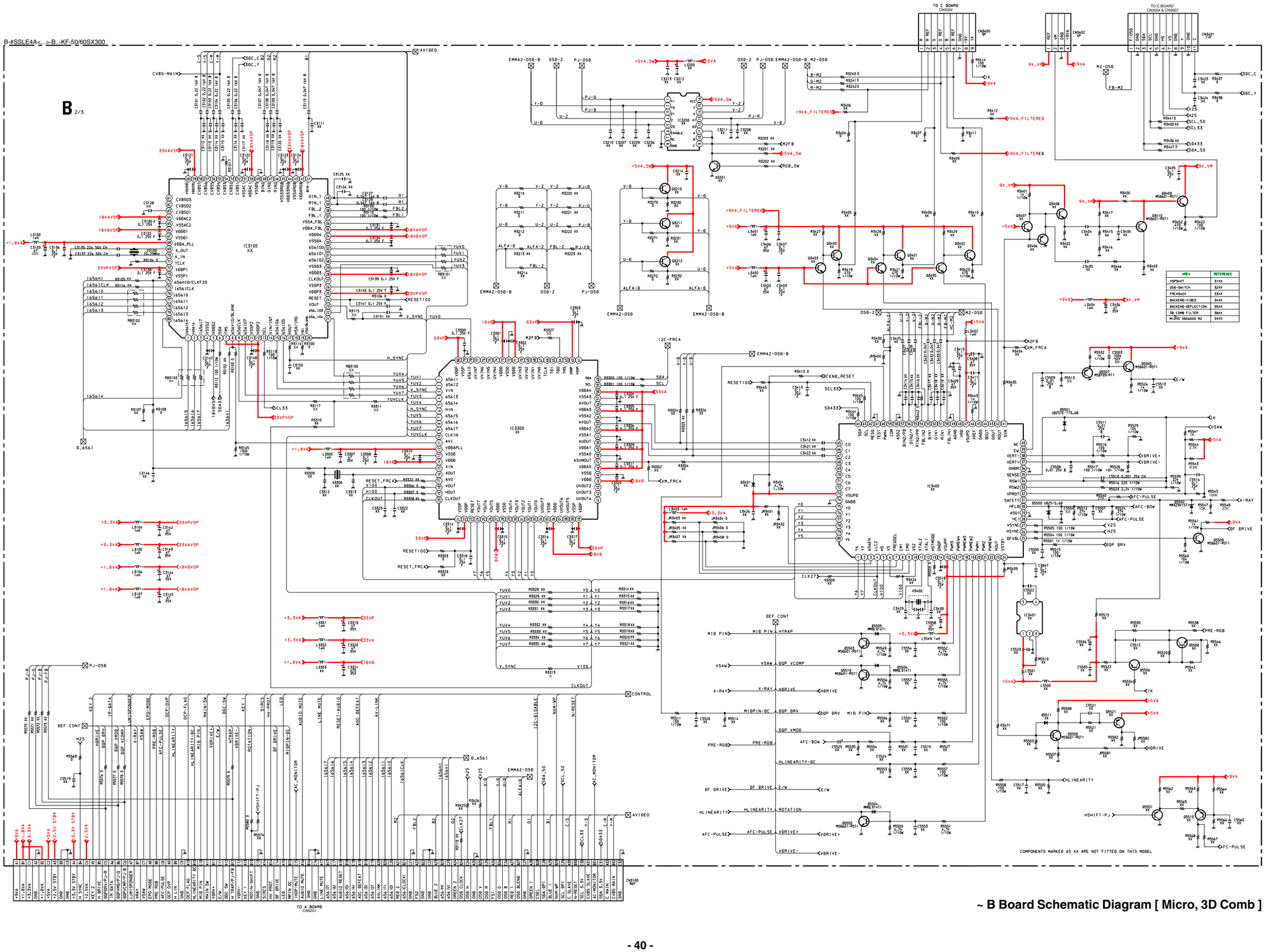

AREA	REFERENCE
VSP9X47	51XX
OSD-SWITCH	52XX
FRC4942X	53XX
BACKEND-VIDEO	54XX
BACKEND-DEFLECTION	55XX
SD COMB FILTER	58XX
MICOM SDA6000 M2	0XXX

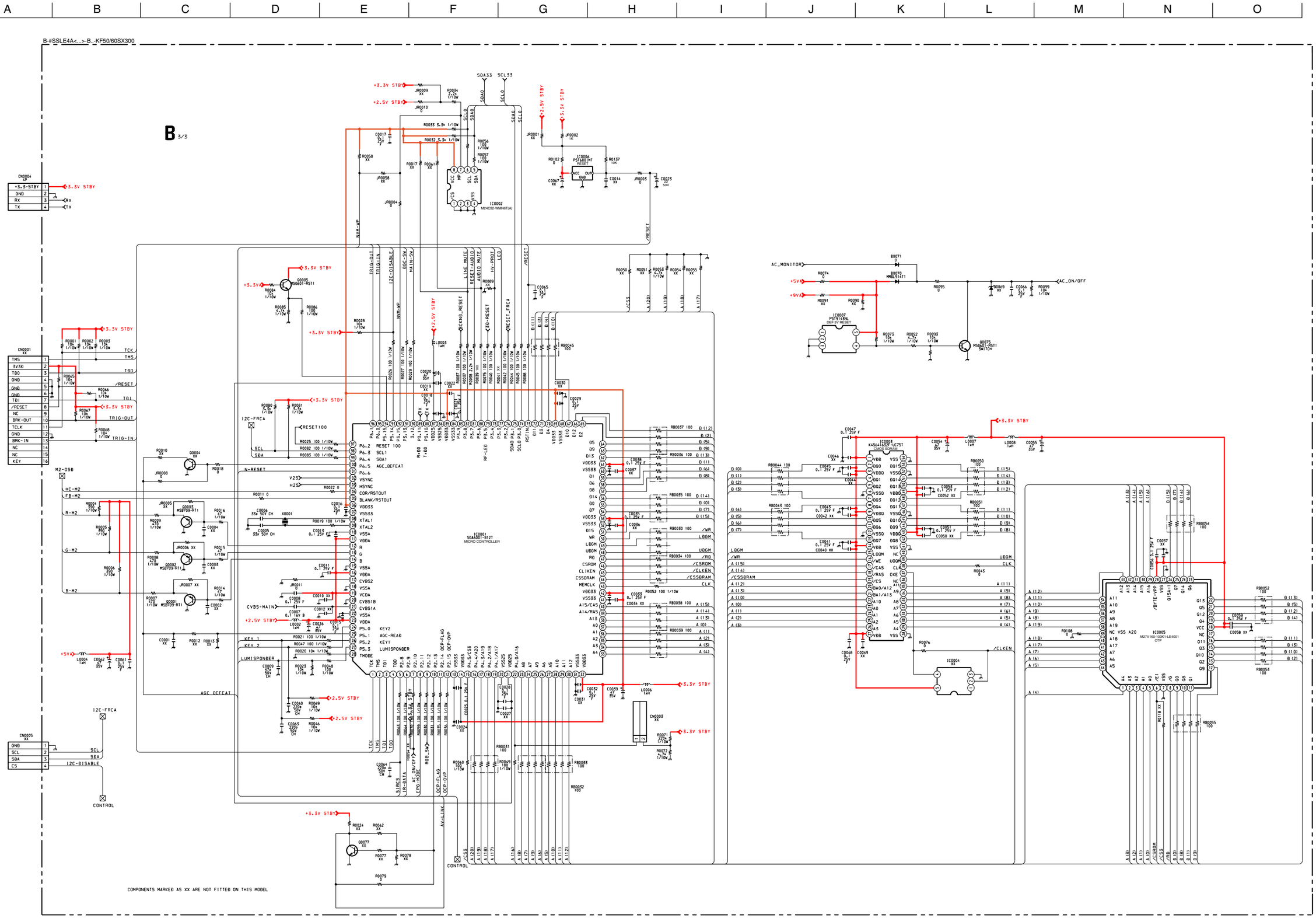
B-#SSLE4A<...>-B..-KF50/60SX300
B 3/3
SDA33
SCL33
+3.3V STBY
+2.5V STBY
IC0002
M24C02-WMN6T(A)
IC0001
SDA6001-B121
MICRO CONTROLLER
IC0003
PS4201MT
IC0004
PS7914SNL
IC0005
M27V160-100K1-LIE4001
OTP
K4S641632F-UC75
CMOS SDRAM
Q0005
MSB709-RT1
Q0006
MSB709-RT1
Q0007
MSB709-RT1
Q0004
Q0077
Q0078
Q0079
SWITCH
CN0004
CN0001
CN0005
CONTROL
I2C-FRCA
I2C-DISABLE
M2-OSD
N-RESET
/RESET
TCK
TMS
TDO
TDI
TRIG-OUT
TRIG-IN
SCL
SDA
R-M2
G-M2
B-M2
HC-M2
FB-M2
CVBS-MAIN
KEY 1
KEY 2
LUMISPONDER
AGC_DEFEAT
AV-LINK
AC_MONITOR
AC_ON/OFF
+5VA
+9VA
COMPONENTS MARKED AS XX ARE NOT FITTED ON THIS MODEL

~ B Printed Wiring Board Conductor Side A ~

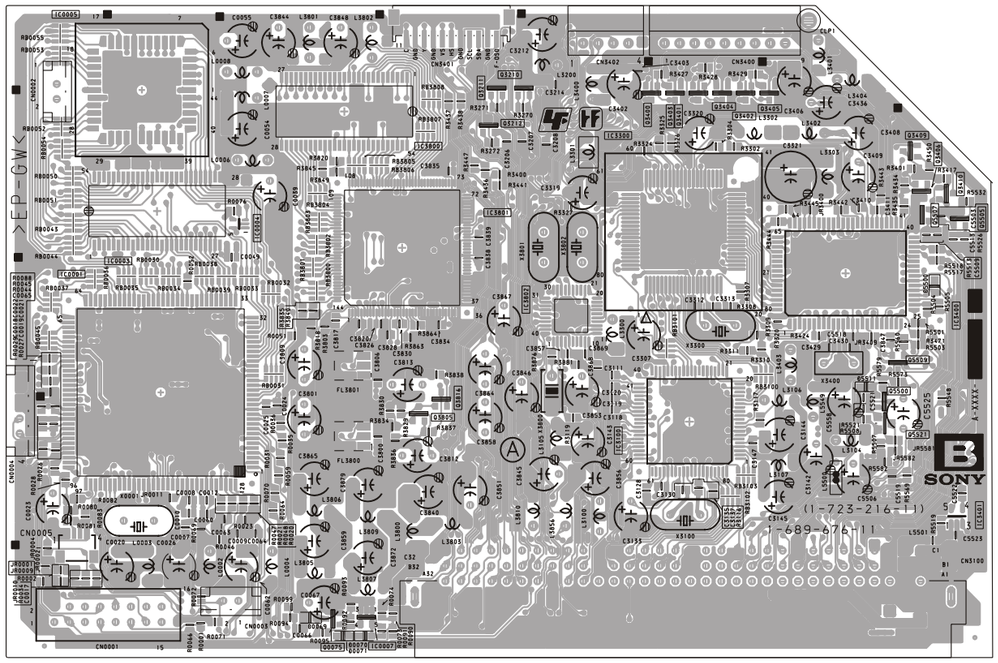

~ B Board Semiconductor Location Table (A Side) ~

DIODE	
D5500	G - 3
IC	
IC0001	B - 3
IC0003	B - 3
IC0005	B - 1
IC3800	D - 2
IC3801	D - 3
IC3802	E - 3
TRANSISTOR	
Q0075	C - 5
Q3409	G - 2
Q3410	H - 3
Q3805	D - 4
Q3816	D - 4
Q5500	G - 4
Q5507	H - 3
Q5509	G - 3

~ B Printed Wiring Board Conductor Side B ~

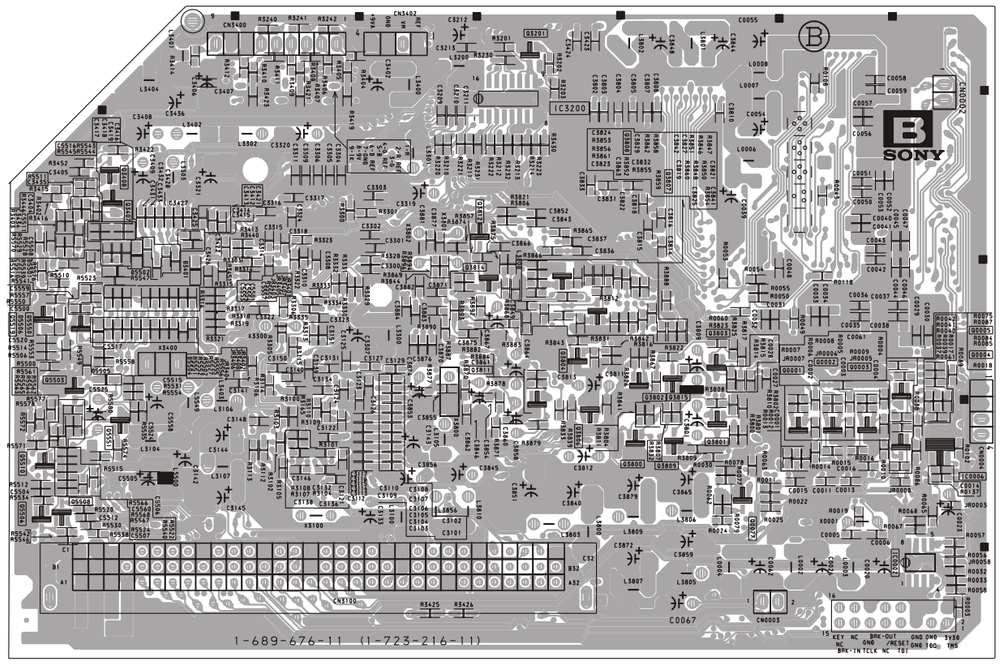

~ B Board Semiconductor Location Table (B Side) ~

DIODE	
D5502	B - 8
IC	
IC0002	G - 10
IC0006	H - 10
TRANSISTOR	
Q0001	F - 9
Q0002	F - 9
Q0003	G - 9
Q3800	E - 9
Q3801	F - 9
Q3802	E - 9
Q3803	F - 9
Q3806	E - 9
Q3811	D - 9
Q3812	D - 8
Q3814	D - 8
Q5503	B - 9

B-#55LE4A<...>-C,-50/60SX300

C 1/4 SCANRATE, BACKEND, DIGITAL GAMMA, LCD DRIVERS

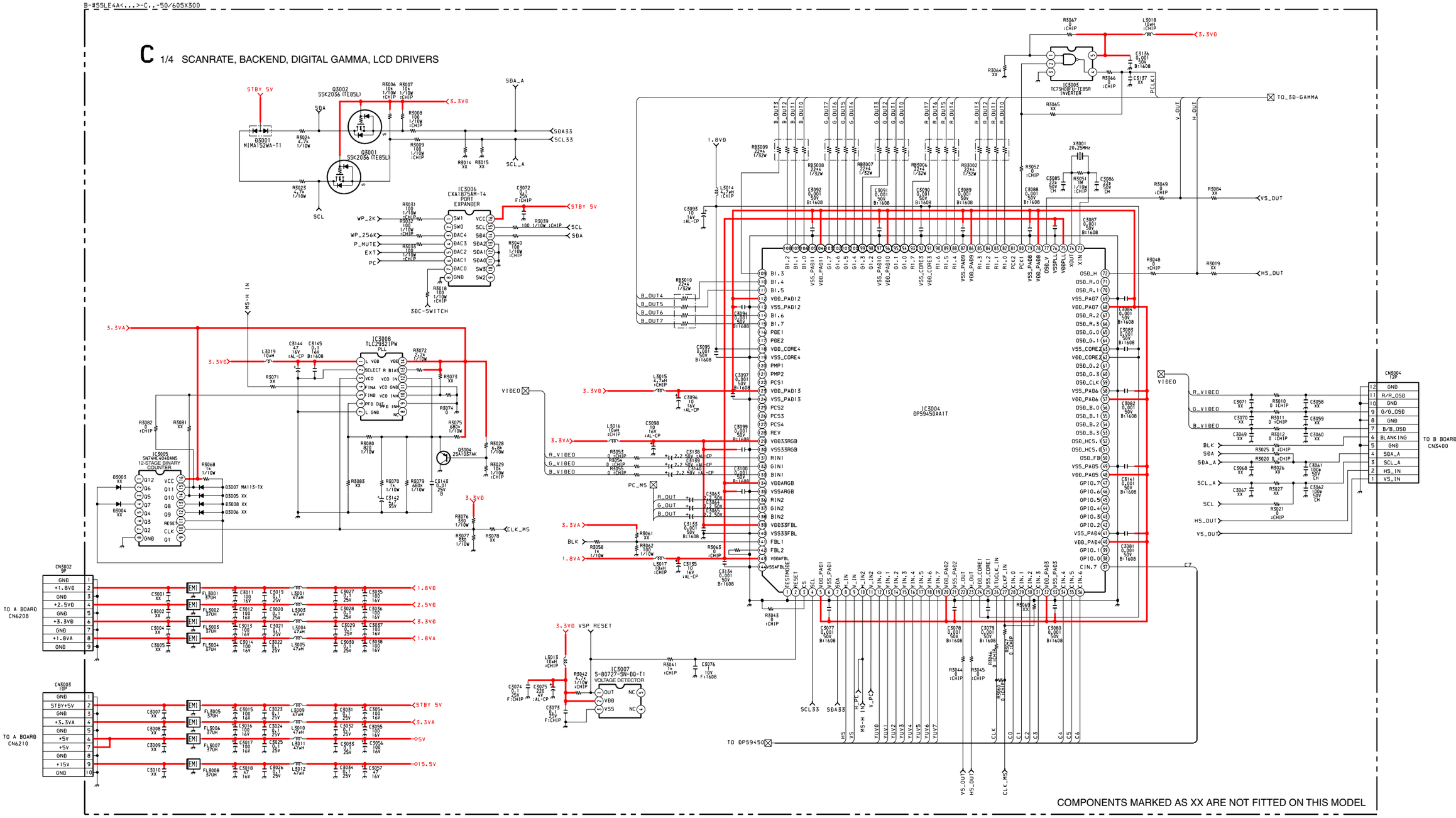

COMPONENTS MARKED AS XX ARE NOT FITTED ON THIS MODEL

~ C Board Schematic Diagram [Scanrate, Backend, Digital Gamma, LCD Drivers] Page 1/4 ~

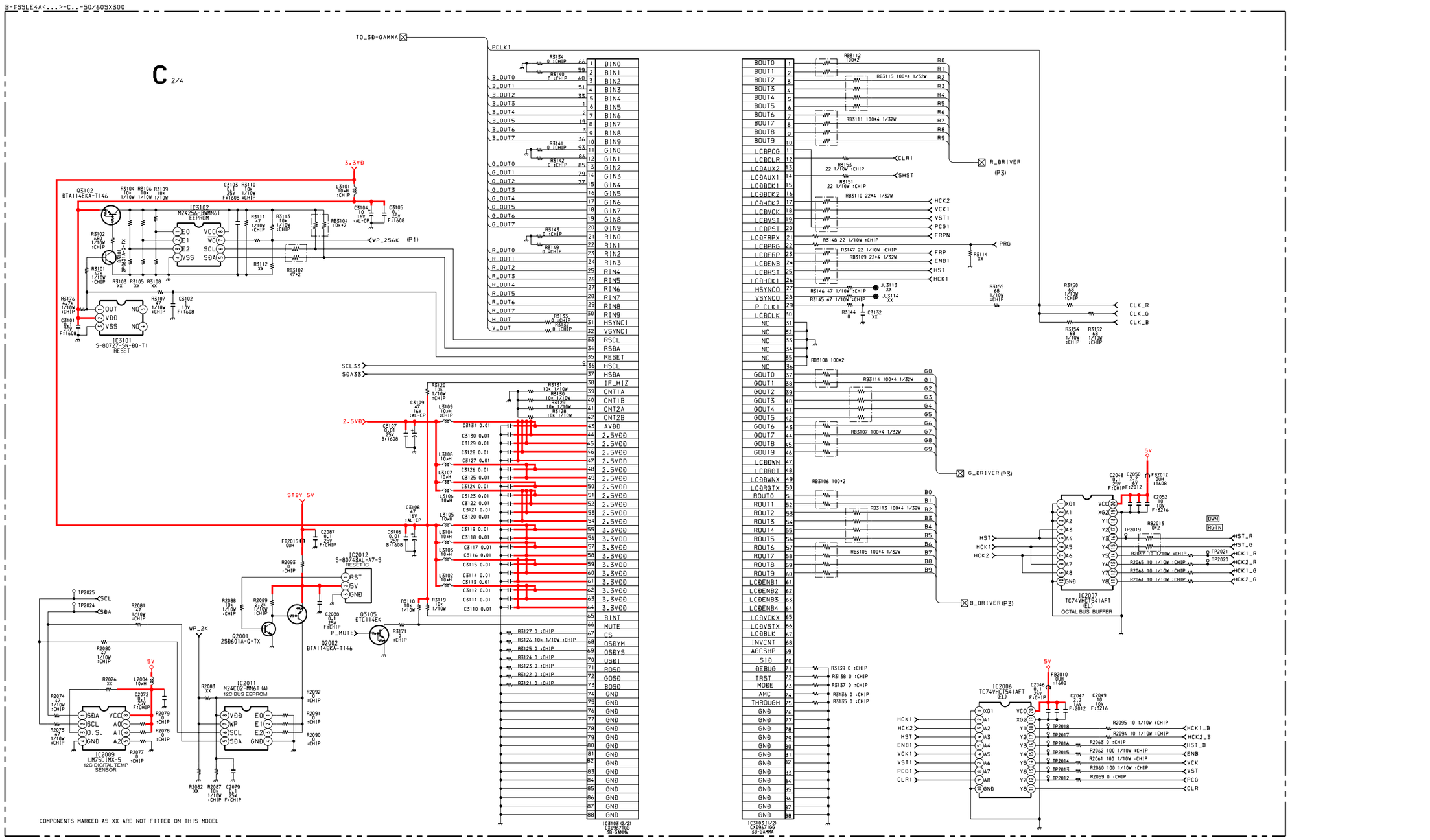

~ C Board Schematic Diagram [Scanrate, Backend, Digital Gamma, LCD Drivers] Page 2/4 ~

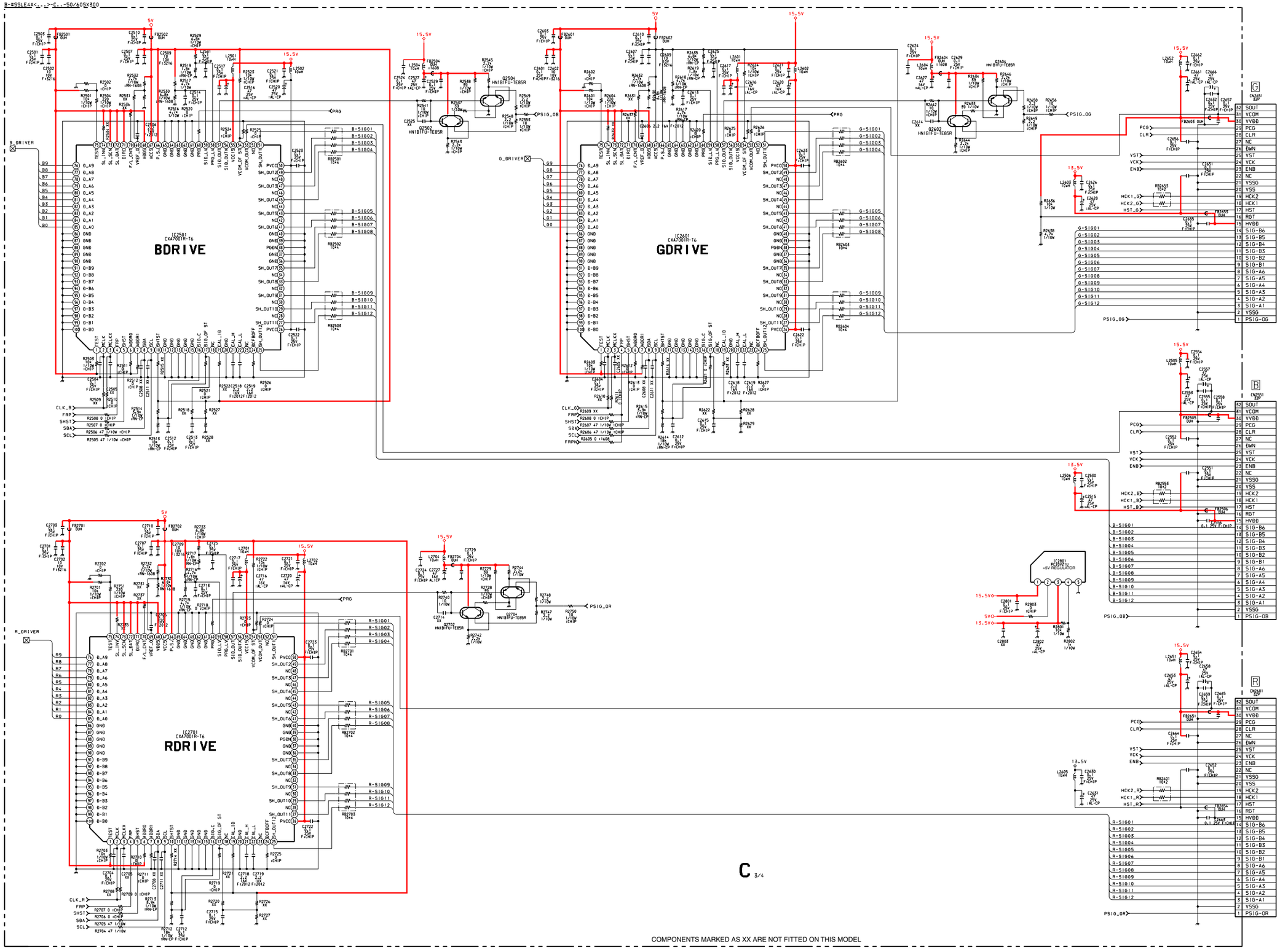

C 3/4

~ C Board Schematic Diagram [Scanrate, Backend, Digital Gamma, LCD Drivers] Page 3/4 ~

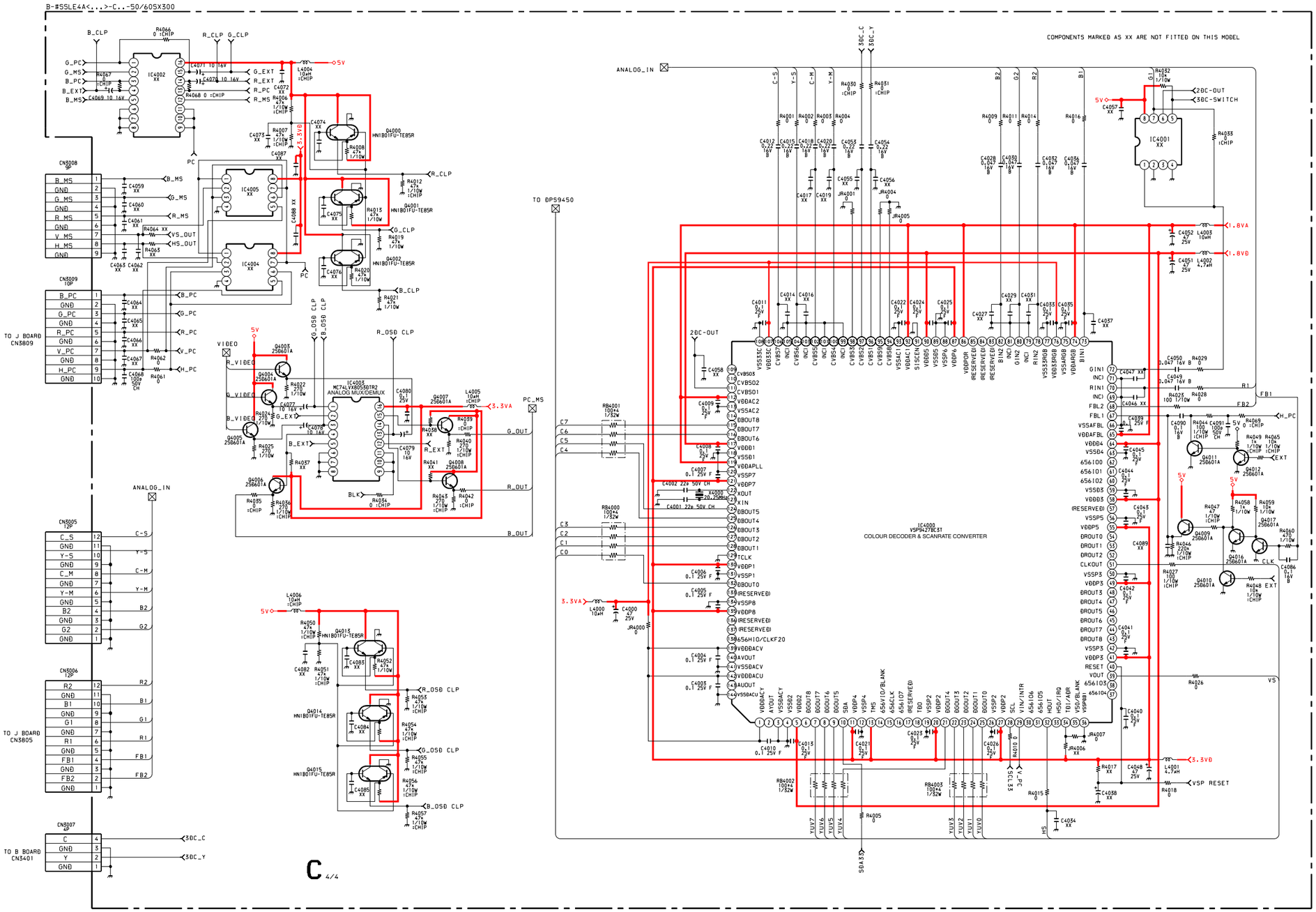

~ C Board Schematic Diagram [Scanrate, Backend, Digital Gamma, LCD Drivers] Page 4/4 ~

~ C Printed Wiring Board Conductor Side A ~

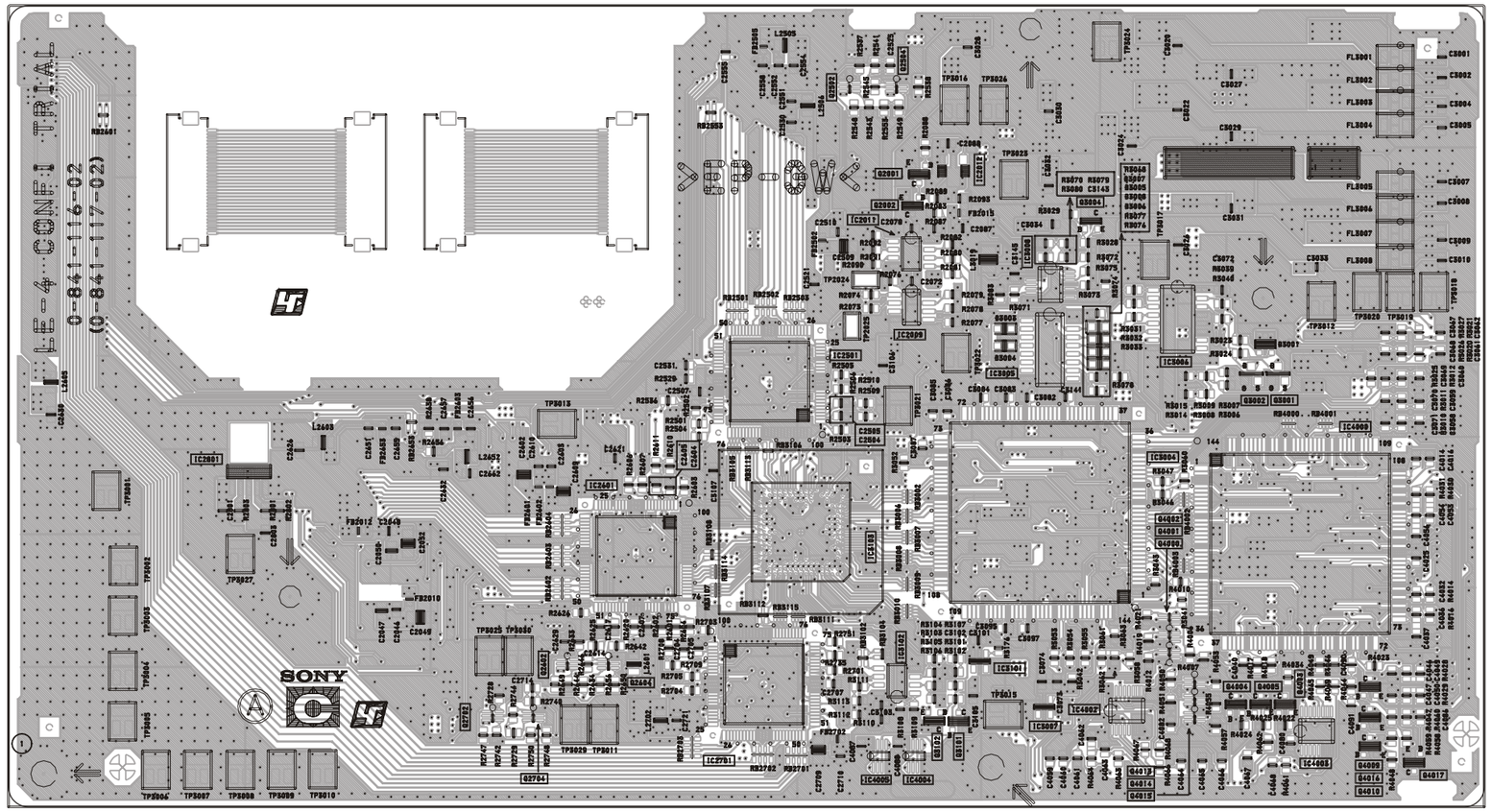

~ C Board Location Table (A Side) ~

IC		Q2002	G - 4
IC2009	G - 5	Q2502	G - 3
IC2011	G - 4	Q2504	G - 3
IC2012	H - 4	Q2602	E - 7
IC2501	F - 5	Q2604	E - 7
IC2601	E - 6	Q2702	D - 7
IC2701	F - 8	Q2704	D - 8
IC2801	C - 6	Q3001	J - 5
IC3003	H - 5	Q3002	J - 5
IC3004	I - 6	Q3004	H - 4
IC3005	H - 5	Q3101	G - 8
IC3006	I - 5	Q3102	G - 8
IC3007	H - 7	Q4000	I - 6
IC3008	H - 4	Q4001	I - 6
IC3101	H - 7	Q4002	I - 6
IC3102	G - 7	Q4003	J - 7
IC3103	G - 6	Q4004	I - 7
IC4000	J - 5	Q4005	J - 7
IC4003	J - 8	Q4009	J - 8
TRANSISTOR		Q4010	J - 8
Q2001	G - 4	Q4016	J - 8

~ C Printed Wiring Board Conductor Side B ~

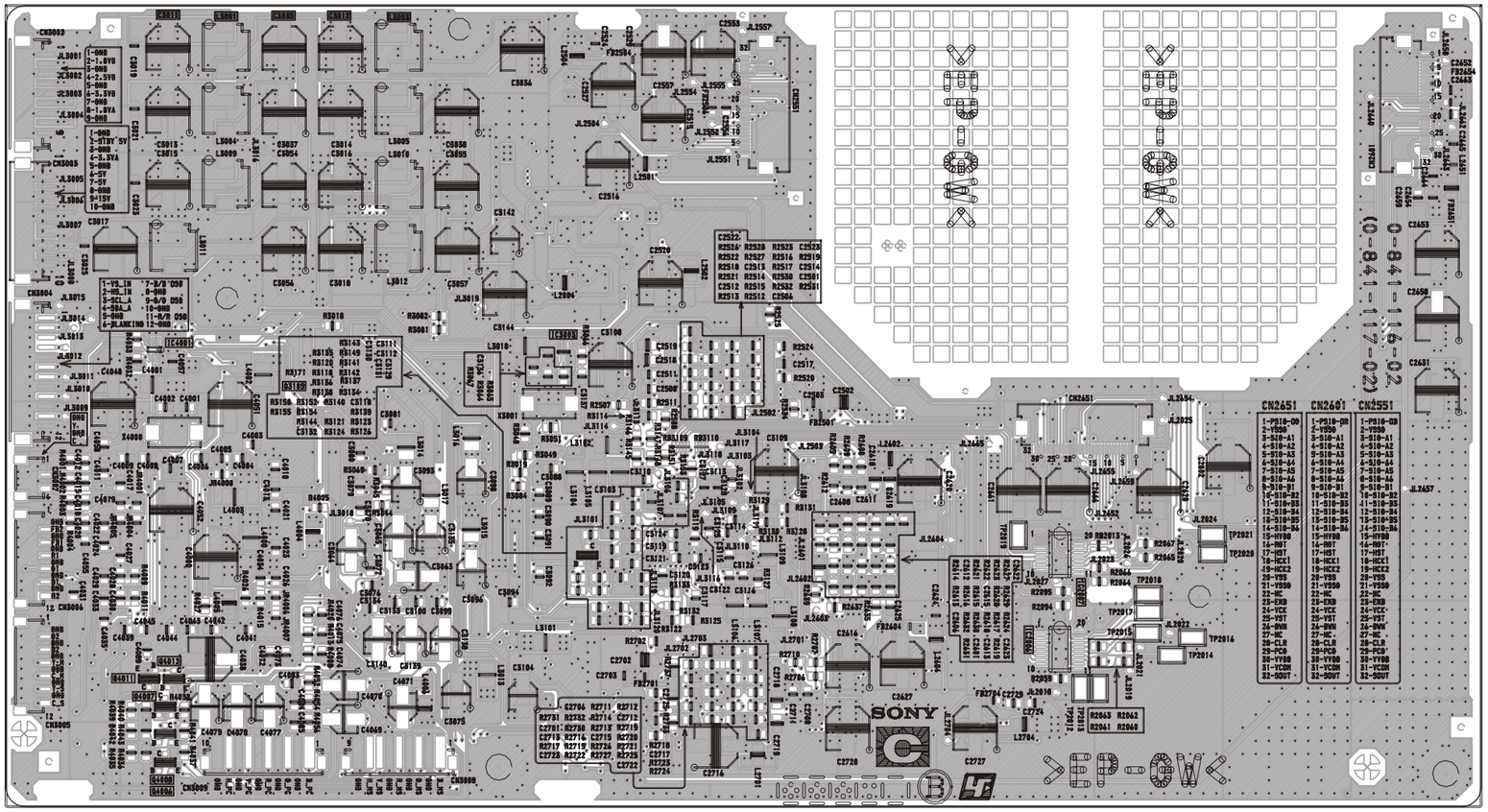

~ C Board Location Table (B Side) ~

IC	
IC2006	H - 6
IC2007	H - 6
IC3003	E - 4
TRANSISTOR	
Q3105	C - 5
Q4006	B - 7
Q4007	B - 7
Q4008	B - 7
Q4011	B - 7
Q4012	B - 7

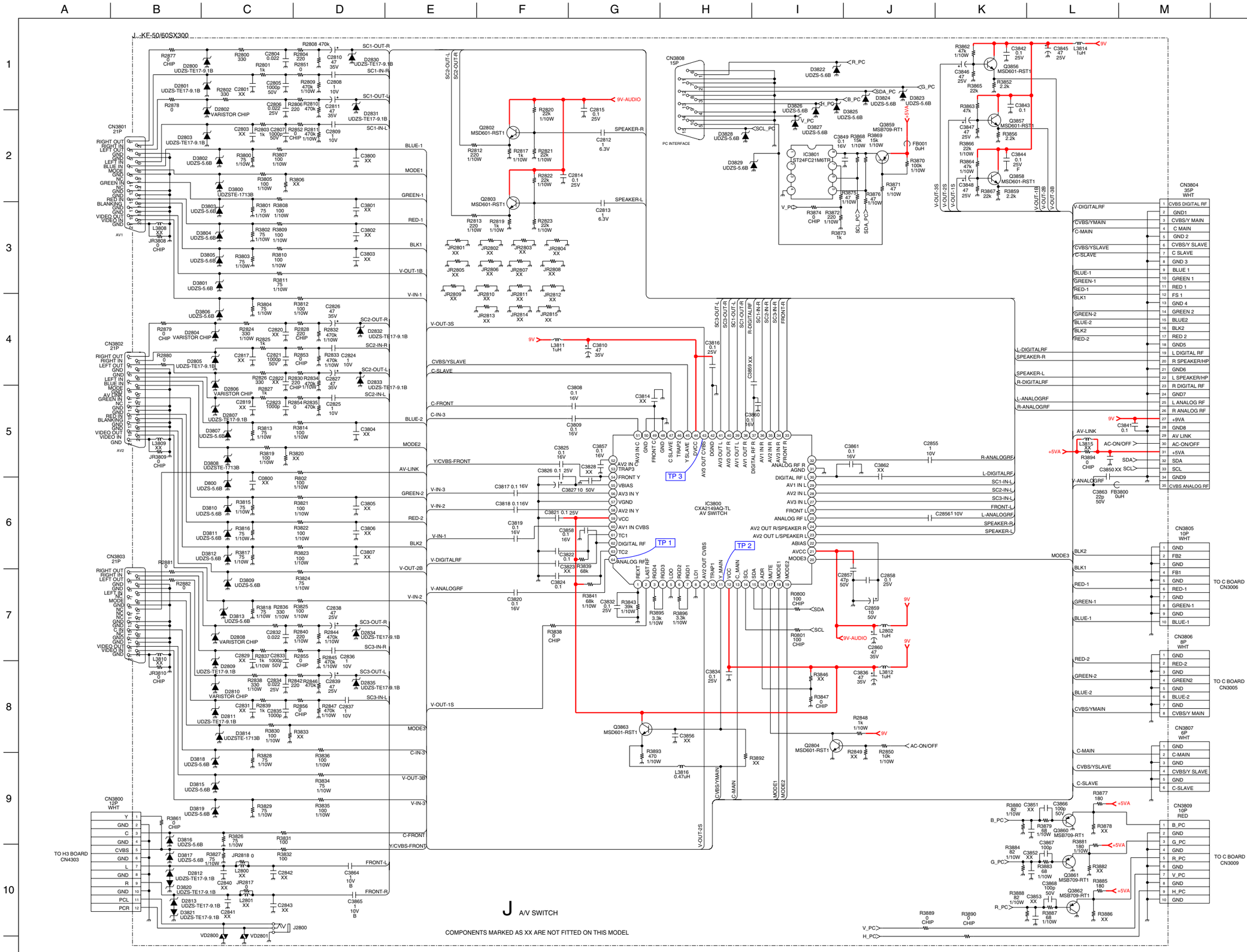

~ J Board Waveforms ~

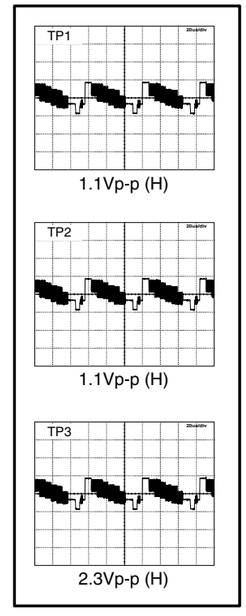

~ J Board Schematic Diagram [AV Switch] ~

~ J Printed Wiring Board Conductor Side A ~

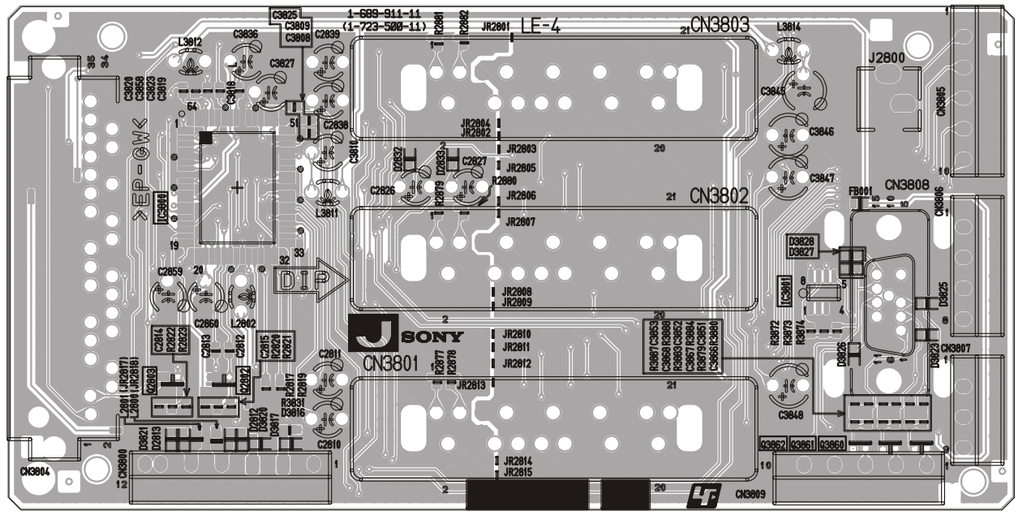

~ J Printed Wiring Board Conductor Side B ~

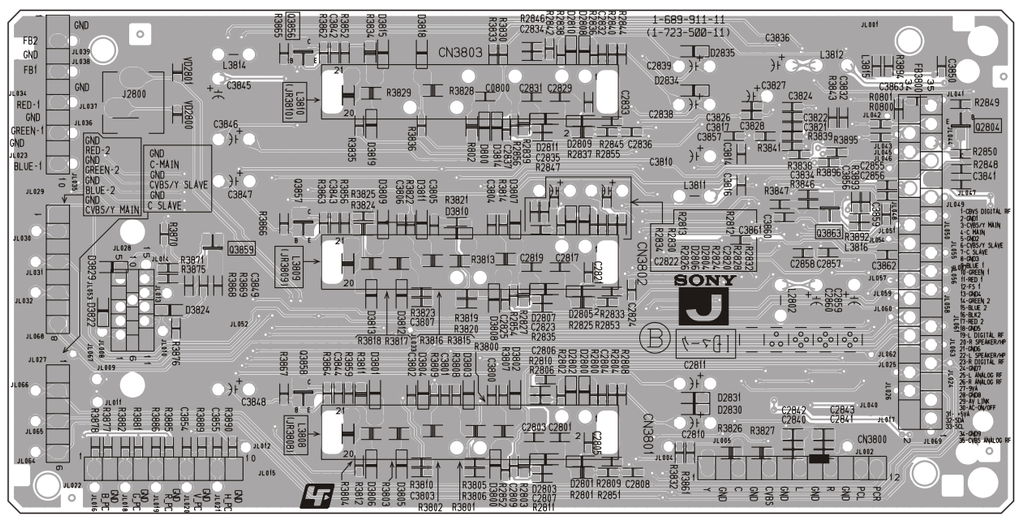

~ J Board Location Table (A Side) ~

DIODE	
D2812	C - 4
D2813	B - 4
D2832	D - 3
D2833	D - 3
D3817	C - 4
D3820	C - 4
D3821	B - 4
D3823	G - 4
D3825	G - 3
D3826	G - 4
D3827	G - 3
D3828	G - 3
IC	
IC3800	B - 3
IC3801	G - 3
TRANSISTOR	
Q2802	C - 4
Q2803	B - 4
Q3860	G - 4
Q3861	F - 4
Q3862	F - 4

~ J Board IC Voltage Table ~

IC Voltage Table			IC Voltage Table		
Ref No	Pin No	Voltage (V)	Ref No	Pin No	Voltage (V)
IC3800	1	1.9	IC3800	32	4.4
	3	4.5		33	4.4
	4	4.5		34	4.4
	5	0.1		35	4.4
	6	4.3		36	4.4
	7	4.3		37	4.4
	8	0.1		38	4.4
	9	4.6		39	4.4
	11	3.9		40	4.4
	13	4.5		41	4.4
	14	4.8		43	4.7
	15	4.8		45	4.4
	16	8.9		47	4.5
	18	0.1		49	4.5
	19	0		51	4.5
	20	0		52	4.5
	22	4.5		54	4.1
	23	4.5		55	4.5
	24	4.5		56	3.1
	25	4.5		58	4.1
	26	4.4		60	4.1
	27	4.4		61	5.1
	28	4.4		62	5.0
	29	4.4		63	4.8
	30	4.4		64	4.5

~ J Board Location Table (B Side) ~

DIODE		D3806	C - 10
D800	D - 8	D3807	D - 8
D2800	E - 9	D3808	D - 9
D2801	D - 10	D3809	D - 8
D2802	E - 9	D3810	D - 8
D2803	D - 10	D3811	D - 8
D2804	E - 8	D3812	D - 9
D2805	E - 9	D3813	C - 9
D2806	E - 8	D3814	D - 8
D2807	E - 9	D3815	C - 7
D2808	D - 7	D3818	D - 7
D2809	D - 7	D3819	C - 8
D2810	D - 7	D3822	B - 9
D2811	D - 8	D3824	B - 9
D2830	F - 9	D3829	B - 8
D2831	F - 9	**TRANSISTOR**	
D2834	E - 7	Q2804	G - 7
D2835	F - 7	Q3856	C - 7
D3800	D - 10	Q3857	C - 8
D3801	C - 9	Q3858	C - 9
D3802	D - 9	Q3859	C - 8
D3803	D - 9	Q3863	F - 8
D3804	C - 9		

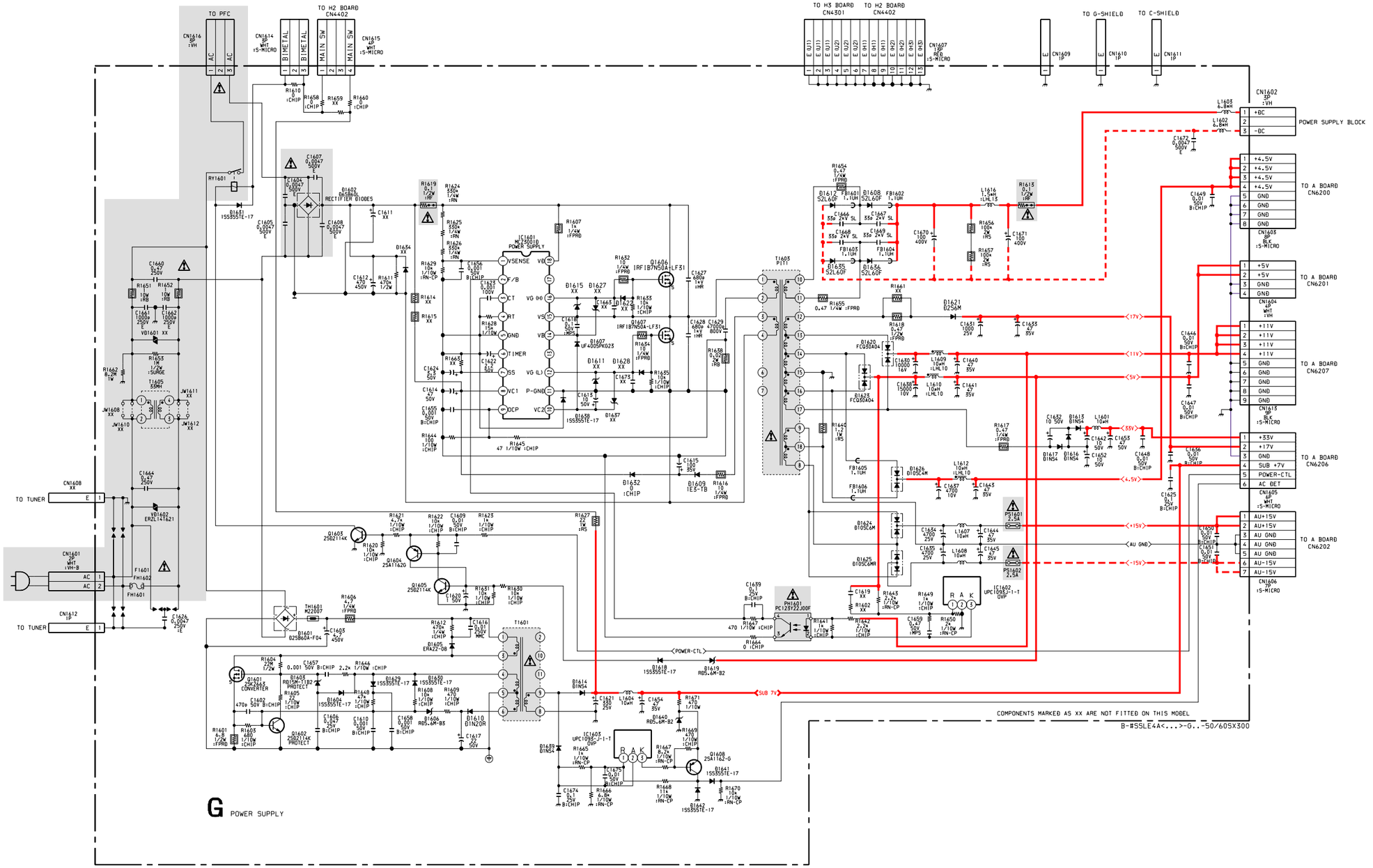

~ G Board Schematic Diagram [Power Supply] ~

~ G Printed Wiring Board Conductor Side ~

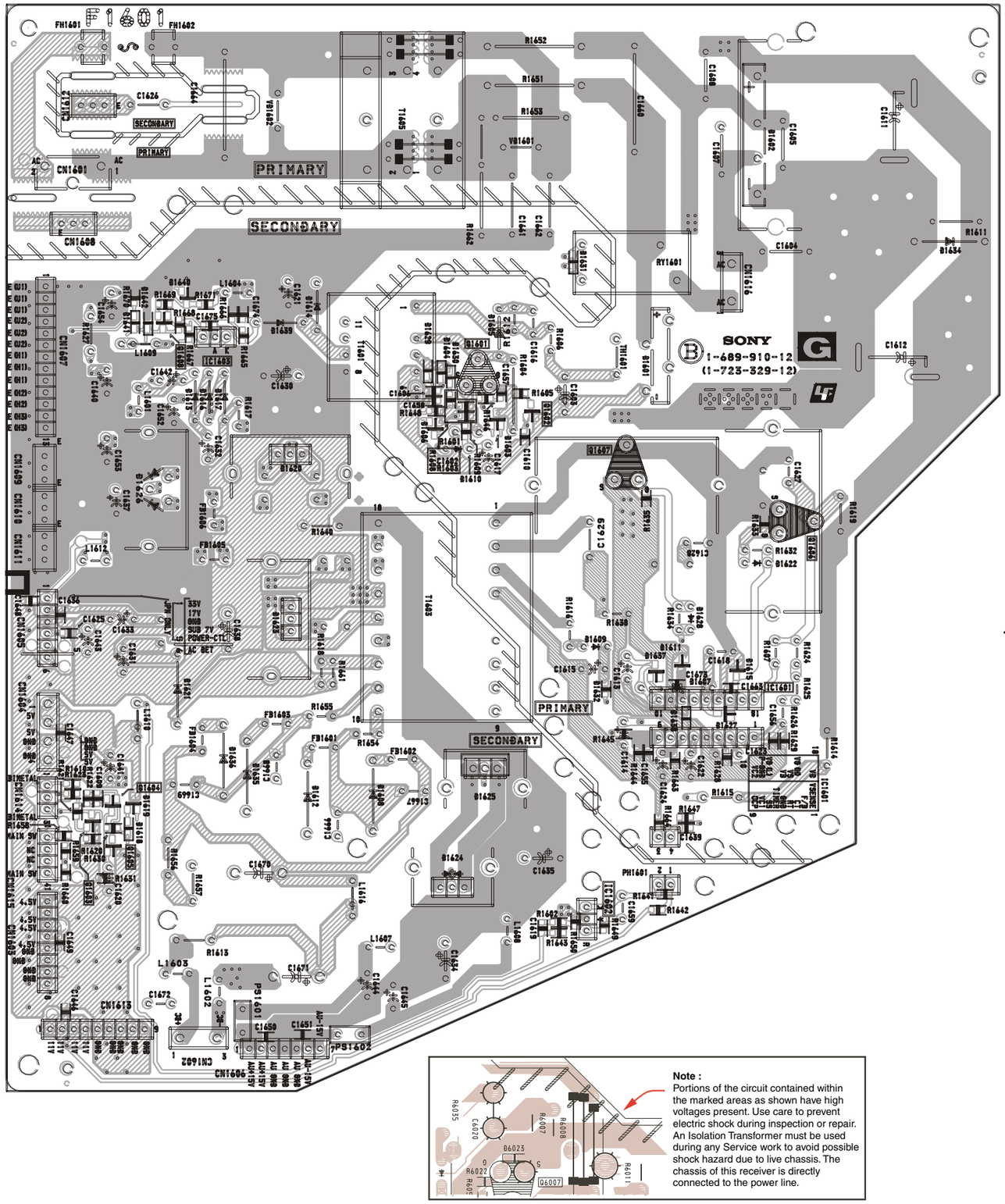
F1601
PRIMARY
SECONDARY
SONY
1-689-910-12
(1-723-329-12)
Note :
Portions of the circuit contained within the marked areas as shown have high voltages present. Use care to prevent electric shock during inspection or repair. An Isolation Transformer must be used during any Service work to avoid possible shock hazard due to live chassis. The chassis of this receiver is directly connected to the power line.

~ G Board IC Voltage Table ~

IC Voltage Table			IC Voltage Table			IC Voltage Table			IC Voltage Table		
Ref No	Pin No	Voltage (V)	Ref No	Pin No	Voltage (V)	Ref No	Pin No	Voltage (V)	Ref No	Pin No	Voltage (V)
IC1601	1	2.8	IC1601	7	4.6	IC1601	14	161.4	IC1606	2	1.2
	2	1.8		8	21.1		15	151.1		3	5.2
	3	2.2		9	-4.0		16	155.7	IC1607	1	6.5
	4	2.5		10	10.4		18	303.8		2	1.2
	6	0		12	4.8	IC1606	1	6.5		3	4

~ G Board Semiconductor Voltage Table ~

Ref	(e)(s)	(b)(g)	(c)(d)
Q1606	151.6	156.4	304.2
Q1607	-	4.7	151.6
Q1603	GND	0.8	0.1
Q1604	0	4.1	4.1
Q1601	0	1.8	154.2
Q1601	-	0.5	0
Q1605	GND	0	4.1

~ H1 Printed Wiring Board Conductor Side ~

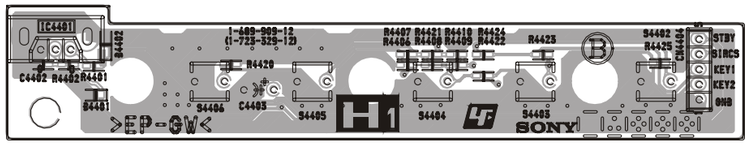

~ H3 Printed Wiring Board Conductor Side ~

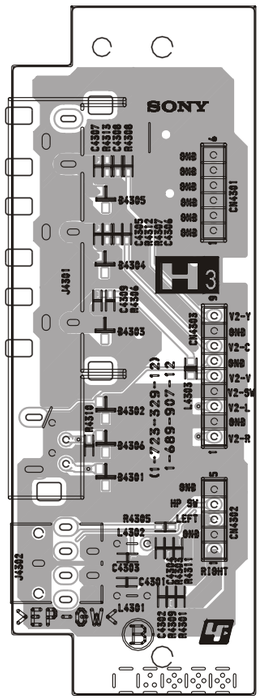

~ H2 Printed Wiring Board Conductor Side ~

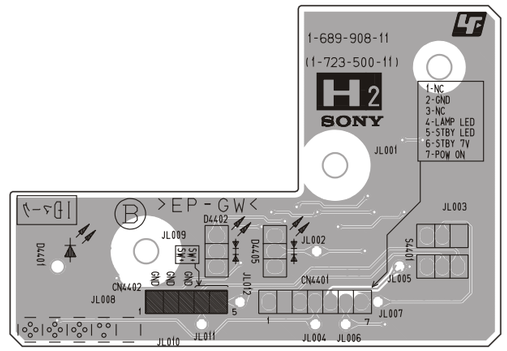

~ T Printed Wiring Board Conductor Side ~

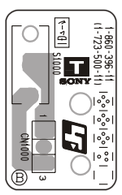

~ H1 Board Schematic Diagram [User Key, Sircs] ~

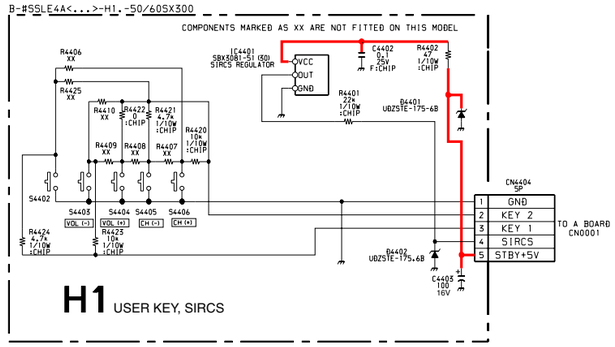

~ H2 Board Schematic Diagram [LED Indicators] ~

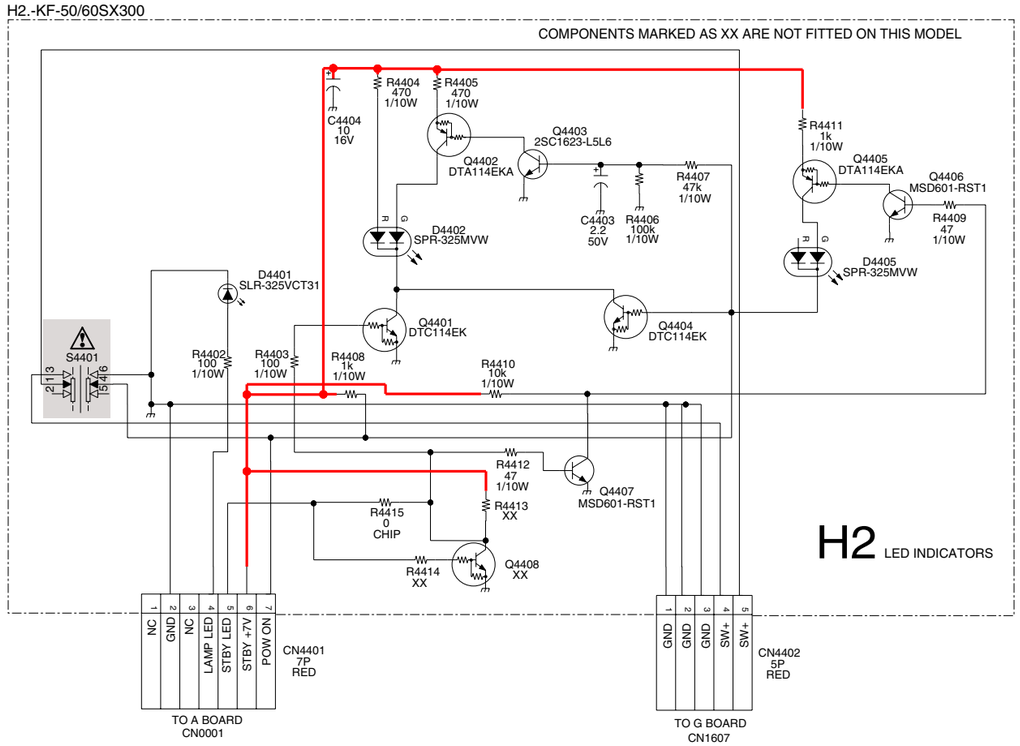

~ H3 Board Schematic Diagram [AV Input, HP Out] ~

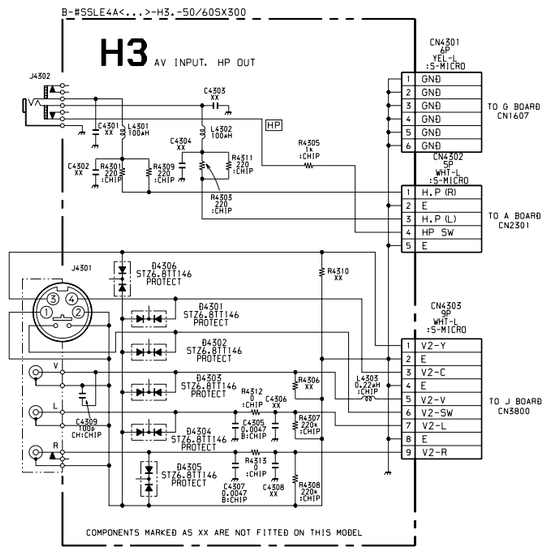

~ T Board Schematic Diagram [Lamp Cover Switch] ~

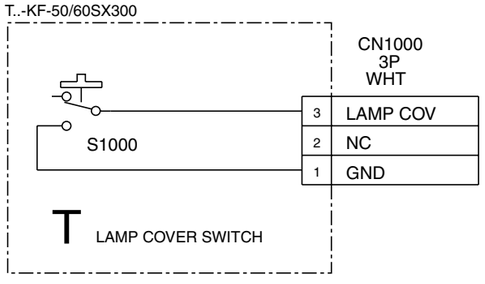

5-4. SEMICONDUCTORS

1E3-TB
D1N20R
D1NS4
ERA11-08
UF4005PKG23

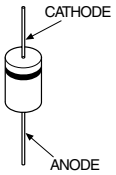

1SS355TE-17
MA113-(TX)
UDZ-TE-1713B
UDZSTE-173.6B
UDZSTE-179.1B

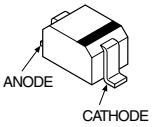

2SA1023AK-T146-R
2SA1162-G
2SC1623-L5L6
2SD2114K
DTA114EKA-T146
DTC114EK

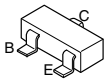

2SK2663

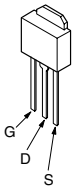

BA033T

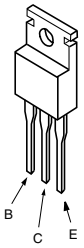

CXA1875AM-T4 (16 pin)
K4S641632F-UC75T (54 pin)
M24C32-WMN6T(A) (8 pin)
TC74VHCT541AFT(EL)
TDA2822D013TR (8 pin)
TLC2932IPWR

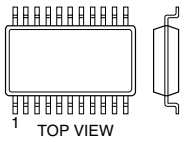

CXA2019AQ-T4 (40 pin)
CXA2149AQ-TL (64 pin)
CXA7001R (100 pin)
DSP9450AA1T (144 pin)
VSP9417BC3G (144 pin)

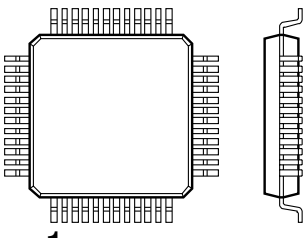

CXD3804R-T6

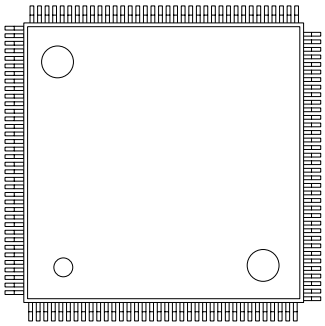

D10SC4M
D10SC6M
D10SC6MR

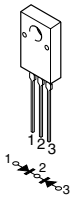

L7805CV/LSY
STP5NK40Z(033Y)
ST2310DHI

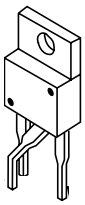

LM75C1MX-5

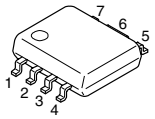

M24256-BWMN6T
M24C02-MN6T(A)

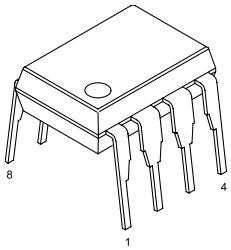

PQ30RV11

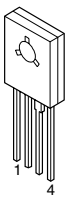

PQ1CG2032FZ

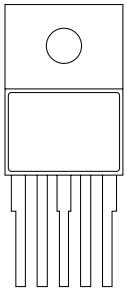

PST9143NL

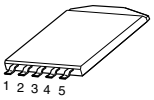

RD5.6M-B2
RD5.6M-B3

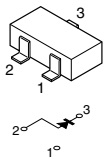

S-80743AL-47-S
S80727-SN-DQ-T1

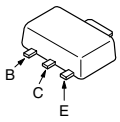

SI-8033S
SI-8050S-LF1101

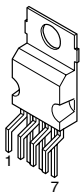

SBX3081-11

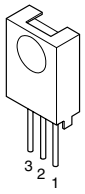

TDA7269A
TDA7482

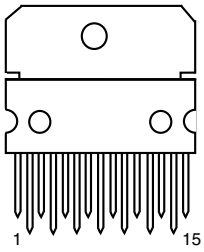

UPC1093J-1-T

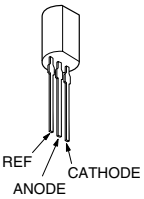

MC74LVX8053

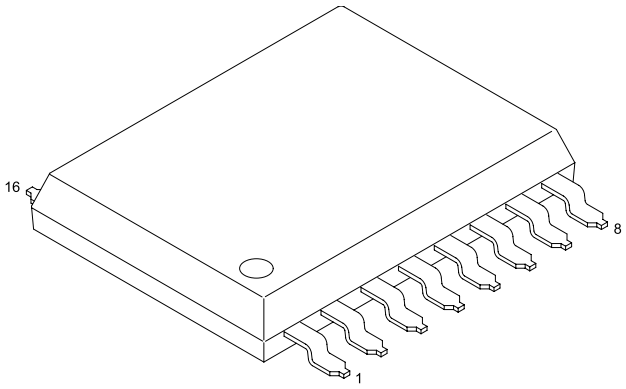

P-MQFP-128

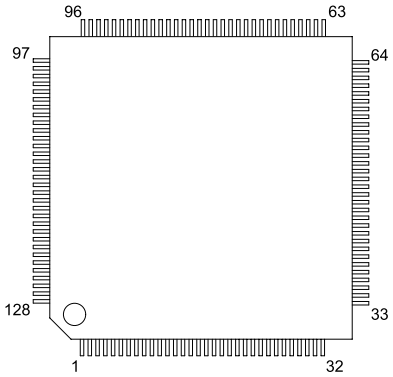

MQFP144

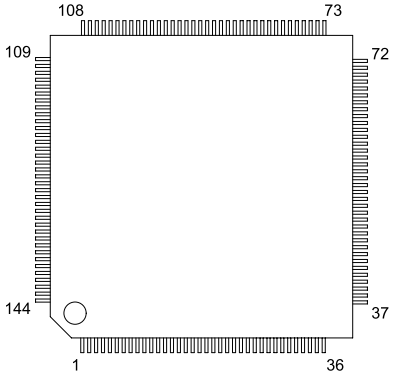

PQ20VZ-U

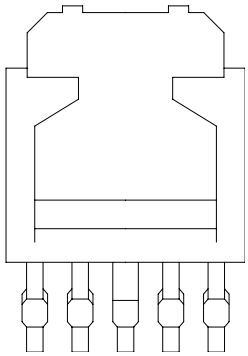

LM75

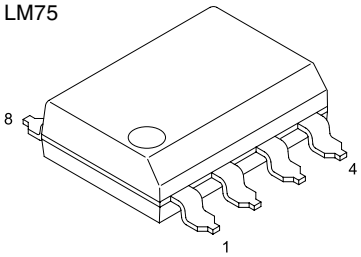

M27V160

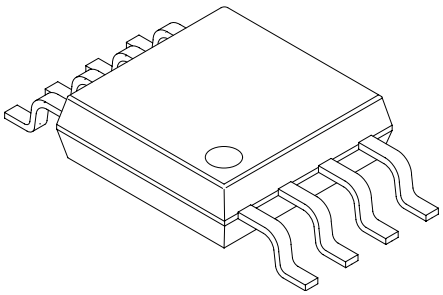

L7800

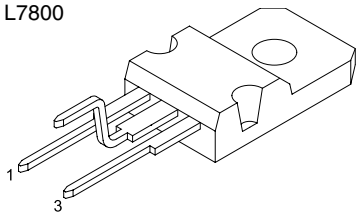

SI8050S
SI8033S

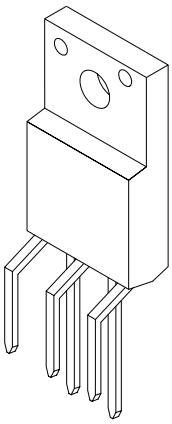

5-5 IC BLOCK DIAGRAMS

A BOARD IC2500 TDA7269

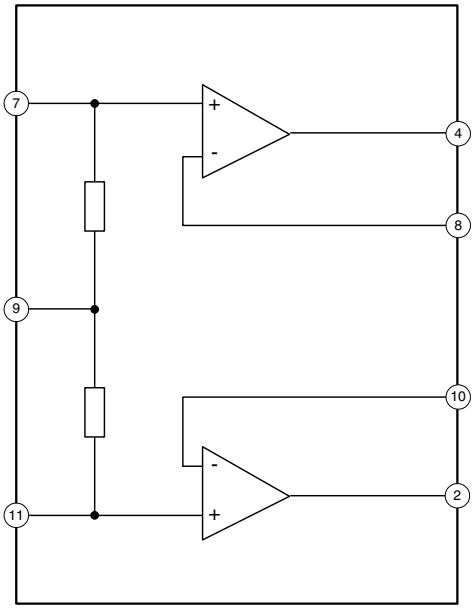

A BOARD IC6201 BA033T

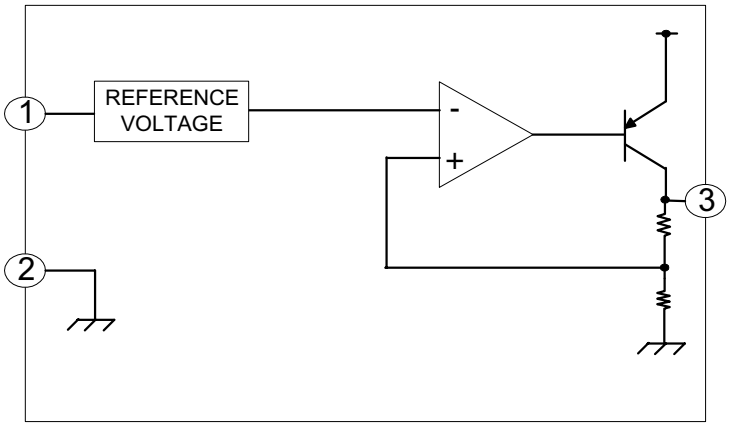

A BOARD IC6208 PQ1CG2032FZ

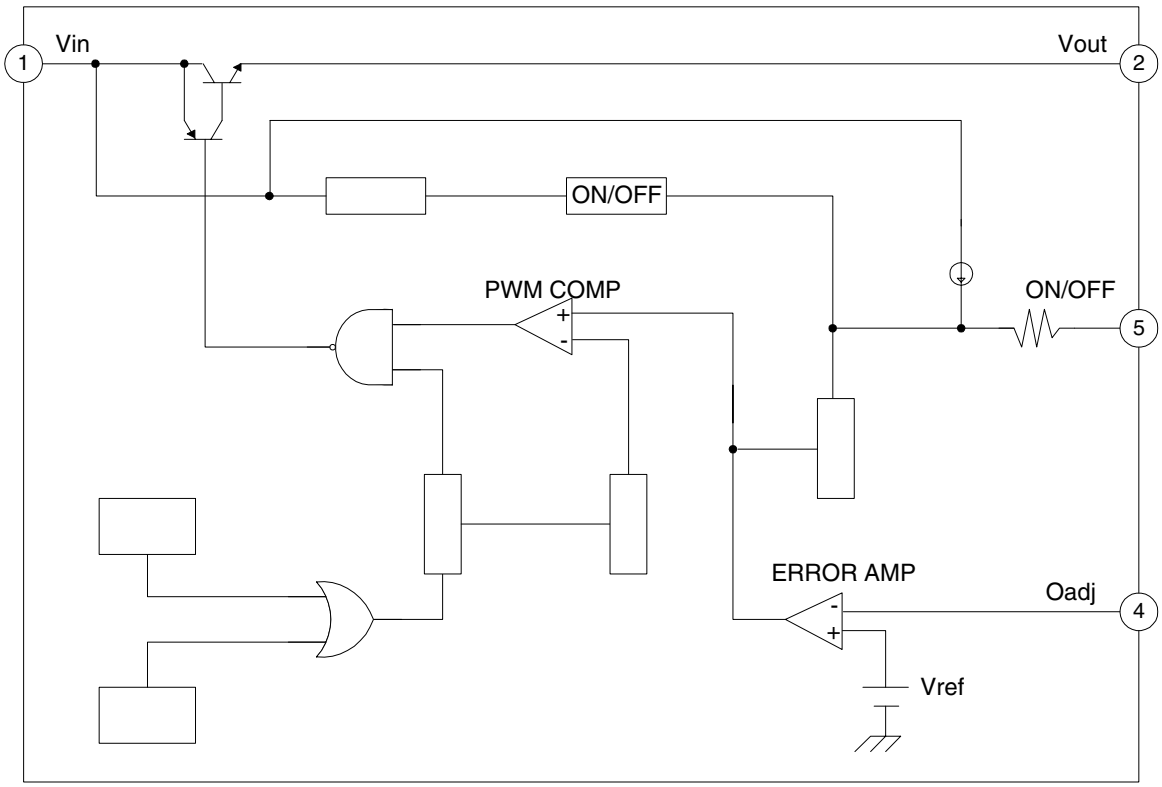

A BOARD IC2000 MSP3411G

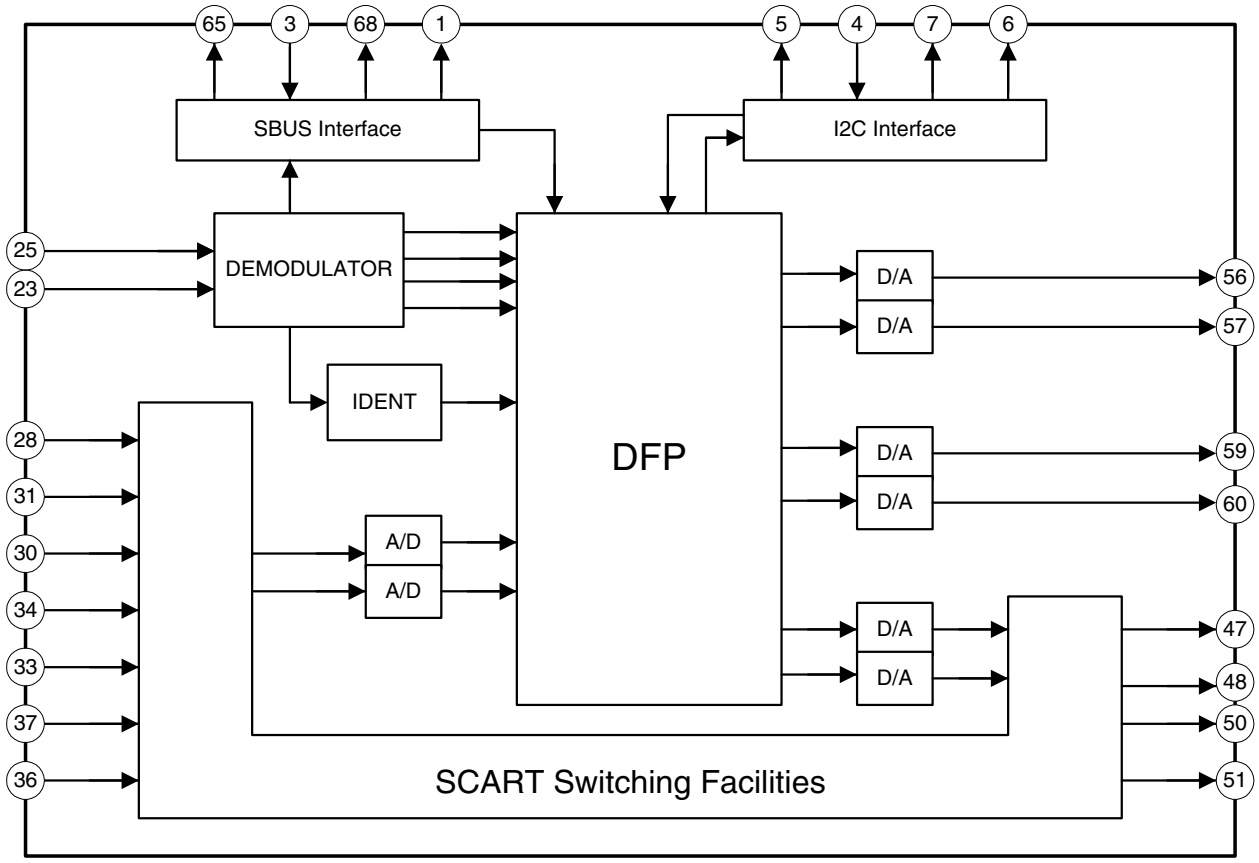

G BOARD IC1601 MCZ3001D

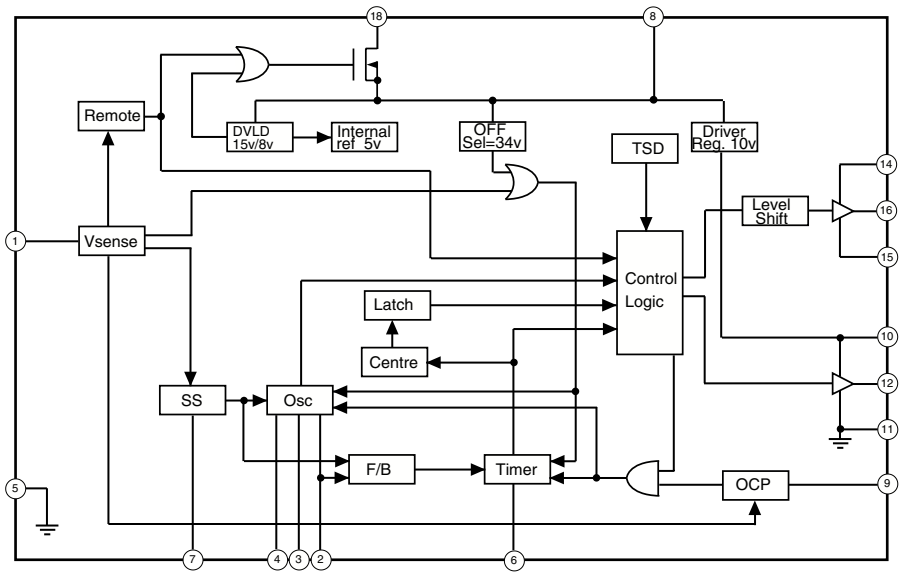

SECTION 6
EXPLODED VIEWS

NOTE :

- Items with no part number and no description are not stocked because they are seldom required for routine service.
- The construction parts of an assembled part are indicated with a collation number in the remarks column.
- Items marked "*" are not stocked since they are seldom required for routine service. Some delay should be anticipated when ordering these items.

The components identified by shading and mark ⚠ are critical for safety.
Replace only with part number specified.

6-1. SCREEN AND COVER BLOCK

■ : 7-685-648-79 SCREW (WASHER HEAD) (+P4X35)
△ : 7-685-658-79 SCREW +BVTP 3X12 TYPE 2 IT-3
● : 7-685-663-79 SCREW +BVTP 4X16 TYPE 2 IT-3
O : 7-685-663-71 SCREW +BVTP 3X14 TYPE 2 IT-3

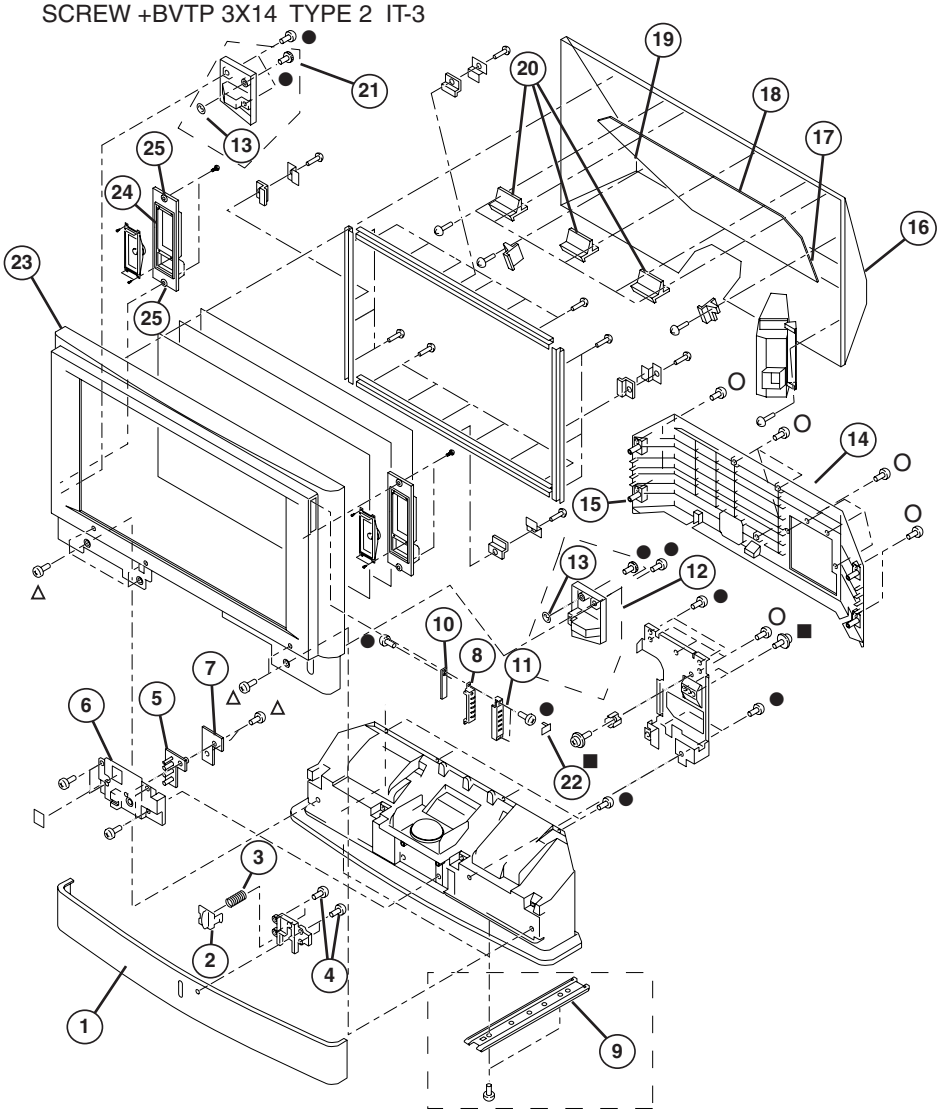

REF.NO.	PART.NO	DESCRIPTION	REMARK
1	X-4041-950-1	COVER ASSY, FRONT (KF-50SX300)	
	X-4041-958-1	COVER ASSY, FRONT (KF-60SX300)	
2	4-094-706-01	BUTTON, POWER	
3	4-036-405-01	SPRING, COMPRESSION	
4	7-685-648-79	SCREW +BVTP 3X12 TYPE2 IT-3	
5	4-094-707-01	GUIDE (LED), LIGHT	
6	4-095-607-11	BRACKET, H2	
7	A-1405-808-A	MOUNTED PC BOARD, H2	
8	4-094-712-01	BUTTON, H1	
9	X-4042-014-2	PLATE (50) ASSY, FOOT (KF-50SX300)	
	X-4042-015-2	PLATE (60) ASSY, FOOT (KF-60SX300)	
10	A-1405-807-A	MOUNTED PC BOARD, H1	
11	4-099-707-01	BRACKET H1 (PAINTED)	
12	X-4041-952-1	CAP REAR (L), ASSY	
13	3-650-537-00	WASHER	
14	4-094-695-31	COVER, REAR (KF-50SX300)	
	4-094-695-41	COVER, REAR (KF-60SX300)	
15	1-825-580-11	LOUDSPEAKER (10CM)	
16	X-4041-944-1	COVER (50) ASSY, MIRROR (KF-50SX300)	
	X-4041-954-1	COVER (60) ASSY, MIRROR (KF-60SX300)	
17	4-077-752-02	HOLDER (L), MIRROR	
18	4-078-871-01	MIRROR (50) (KF-50SX300)	
	4-097-650-01	MIRROR (60) (KF-60SX300)	
19	4-077-731-02	HOLDER (R), MIRROR	
20	4-077-669-01	HOLDER (U), MIRROR	
21	X-4041-951-1	CAP REAR (R), ASSY	
22	4-099-706-01	CAP H1 (PAINTED)	
23	A-1604-990-A	FRAME (50) ASSY, SCREEN (KF-50SX300)	
	A-1605-715-A	FRAME (60) ASSY, SCREEN (KF-60SX300)	
24	1-544-857-11	SPEAKER (13X7CM)	
25	4-058-870-01	SCREW	

6-2. CABINET BLOCK

The components identified by shading and mark ⚠ are critical for safety. Replace only with part number specified.

△ : 7-685-658-79 SCREW +BVTP 3X12 TYPE 2 IT-3

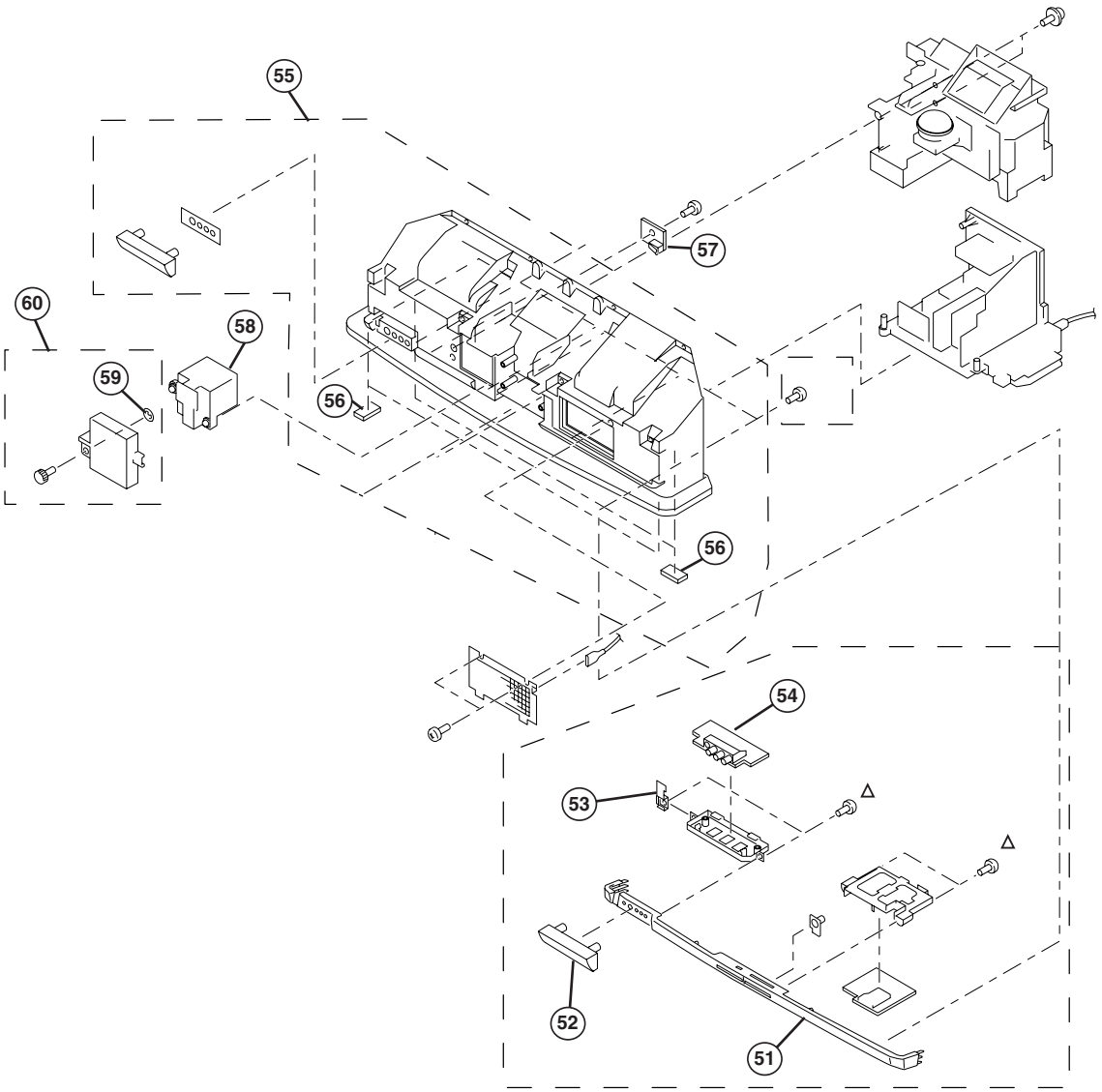

REF.NO.	PART.NO	DESCRIPTION	REMARK
51	4-094-723-21	COVER, BOTTOM	
52	4-098-512-01	DOOR, H3	
53	4-094-757-01	SPRING, PLATE	
54	*A-1405-806-A	MOUNTED PC BOARD, H3	
55	X-4041-946-1	CABINET (50) ASSY (KF-50SX300)	
	X-4041-956-1	CABINET (60) ASSY (KF-60SX300)	
56	4-097-548-01	CUSHION, FOOT	
57	*A-1405-811-A	MOUNTED PC BOARD, T	
58	A-1606-075-A	LAMP BLOCK ASSY	
59	*3-650-537-00	WASHER	
60	4-094-747-11	DOOR, LAMP	

6-3. MAIN BRACKET BLOCK

The components identified by shading and mark ⚠ are critical for safety.
Replace only with part number specified.

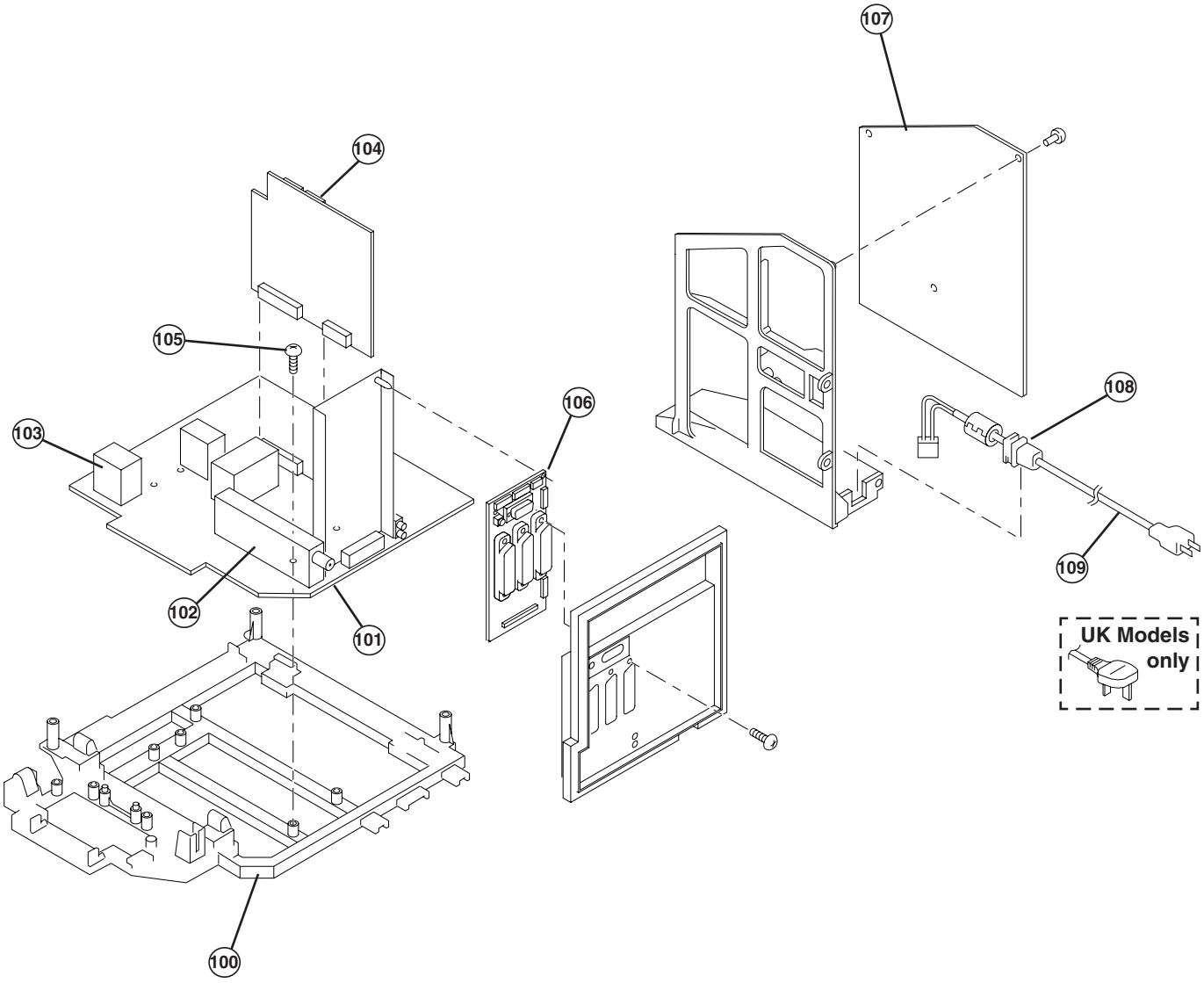

REF.NO.		PART.NO	DESCRIPTION	REMARK
100		4-096-934-11	BRACKET, MAIN	
101		*A-1405-803-A	MOUNTED PC BOARD, A	
102		8-598-535-20	FRONT END BTF-EF411	
103		1-419-965-11	COIL, CHOKE 27.0MMH	
104		*H-8001-379-A	MOUNTED PC BOARD, B (VAR)	
105		7-685-663-79	SCREW +BVTP 4X16 TYPE2 IT-3	
106		*A-1405-804-A	MOUNTED PC BOARD, J	
107		*A-1302-408-A	COMPLETE PC BOARD, G	
108		4-065-070-01	HOLDER, AC CORD	
109	⚠	1-765-286-11	CORD, POWER (KF-50SX300K/KF-50SX300AEP/ KF-60SX300K/KF-60SX300AEP)	
	⚠	1-776-860-11	POWER CORD, FILTER(UK) (KF-50SX300U/ KF-60SX300U)	

6-4. PICTURE TUBE BLOCK

The components identified by shading and mark ⚠ are critical for safety. Replace only with part number specified.

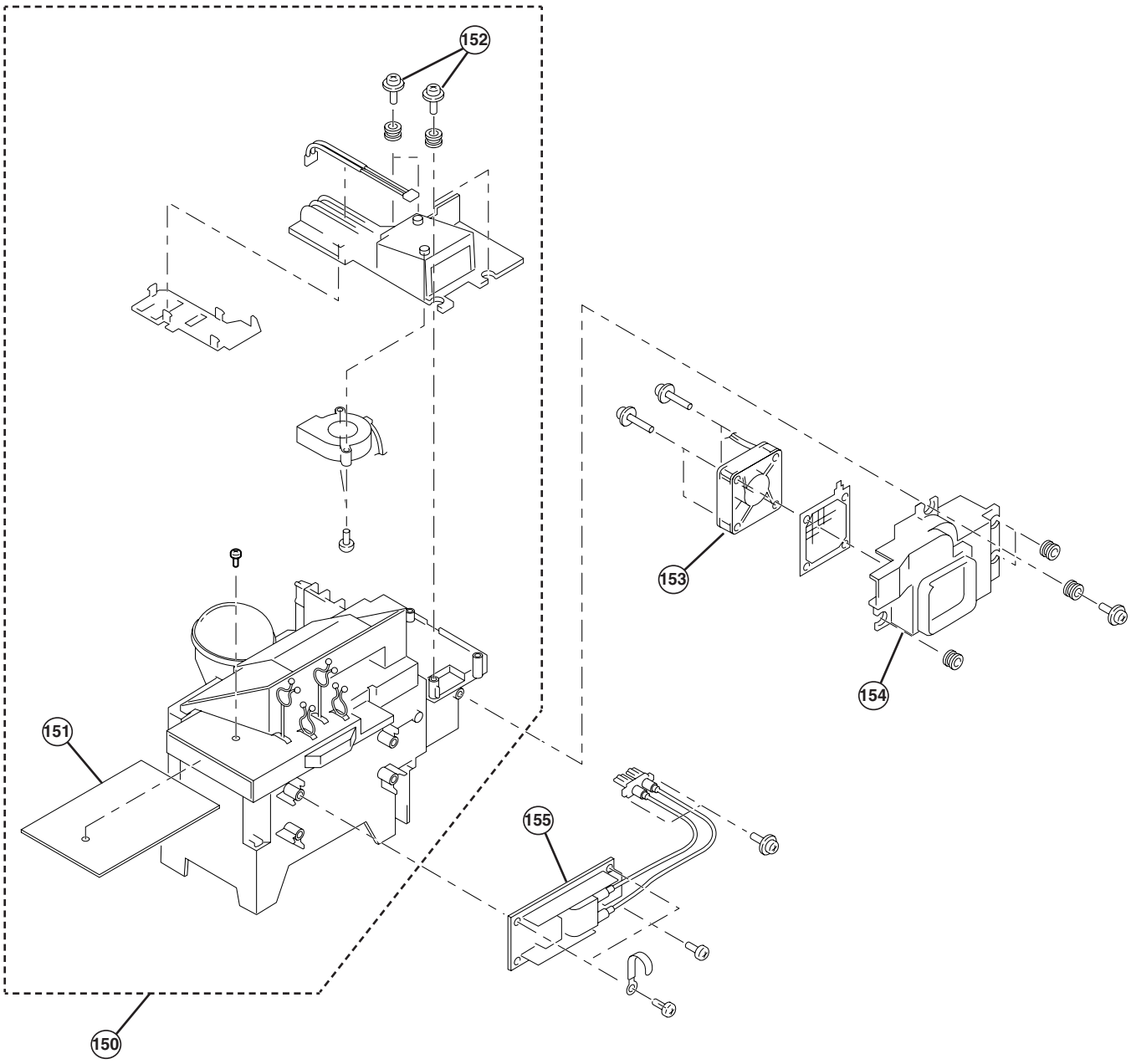

REF.NO.		PART.NO	DESCRIPTION	REMARK
150		A-1604-992-A	OPTICS UNIT BLOCK ASSY	
151		A-1302-407-A	COMPLETE PC BOARD, C	
152		4-319-520-11	SCREW, SPECIAL (+PW4X30)	
153		1-787-057-11	D.C. FAN	
154		1-418-257-11	FAN UNIT, DC	
155	⚠	1-468-798-11	POWER SUPPLY BLOCK	

SECTION 7
ELECTRICAL PARTS LIST

PARTS LISTING TABLE OF CONTENTS

	Page
B BOARD COMPLETE Parts List :	63
A BOARD COMPLETE Parts List :	68
J BOARD COMPLETE Parts List :	73
T BOARD COMPLETE Parts List :	76
G BOARD COMPLETE Parts List :	76
H1 BOARD COMPLETE Parts List :	79
H2 BOARD COMPLETE Parts List :	79
H3 BOARD COMPLETE Parts List :	80
C BOARD COMPLETE Parts List :	80
MISCELLANEOUS :	88
ACCESSORIES AND PACKAGING MATERIALS :	88
REMOTE COMMANDER:	88

Note : Refer to the designated variant parts list when seeking a part indicated by an asterisk (*)
Parts indicated (XX) on the Schematic Diagram are not used in this model and therefore do not appear in the Parts List.

* H-8001-379-A B Board Complete

< CAPACITOR >

REF.NO.	PART.NO	DESCRIPTION	REMARK
C0005	1-162-921-11	CERAMIC CHIP 33PF	5.00% 50V
C0006	1-162-921-11	CERAMIC CHIP 33PF	5.00% 50V
C0007	1-107-826-11	CERAMIC CHIP 0.1UF	10.00% 16V
C0008	1-164-156-11	CERAMIC CHIP 0.1UF	25V
C0009	1-162-923-11	CERAMIC CHIP 47PF	5.00% 50V
C0011	1-164-156-11	CERAMIC CHIP 0.1UF	25V
C0013	1-164-156-11	CERAMIC CHIP 0.1UF	25V
C0015	1-164-156-11	CERAMIC CHIP 0.1UF	25V
C0016	1-164-156-11	CERAMIC CHIP 0.1UF	25V
C0017	1-164-156-11	CERAMIC CHIP 0.1UF	25V
C0018	1-164-156-11	CERAMIC CHIP 0.1UF	25V
C0020	1-126-947-11	ELECT 47UF	20.00% 35V
C0021	1-164-156-11	CERAMIC CHIP 0.1UF	25V
C0023	1-107-715-11	ELECT 22UF	20.00% 50V
C0025	1-164-156-11	CERAMIC CHIP 0.1UF	25V
C0026	1-126-947-11	ELECT 47UF	20.00% 35V
C0028	1-164-156-11	CERAMIC CHIP 0.1UF	25V
C0029	1-164-156-11	CERAMIC CHIP 0.1UF	25V
C0032	1-164-156-11	CERAMIC CHIP 0.1UF	25V
C0033	1-164-156-11	CERAMIC CHIP 0.1UF	25V
C0035	1-164-156-11	CERAMIC CHIP 0.1UF	25V
C0038	1-164-156-11	CERAMIC CHIP 0.1UF	25V
C0039	1-126-947-11	ELECT 47UF	20.00% 35V
C0041	1-164-156-11	CERAMIC CHIP 0.1UF	25V
C0043	1-164-156-11	CERAMIC CHIP 0.1UF	25V
C0045	1-164-156-11	CERAMIC CHIP 0.1UF	25V
C0047	1-164-156-11	CERAMIC CHIP 0.1UF	25V
C0048	1-164-156-11	CERAMIC CHIP 0.1UF	25V
C0051	1-164-156-11	CERAMIC CHIP 0.1UF	25V
C0053	1-164-156-11	CERAMIC CHIP 0.1UF	25V
C0054	1-126-947-11	ELECT 47UF	20.00% 35V
C0055	1-126-947-11	ELECT 47UF	20.00% 35V
C0056	1-164-156-11	CERAMIC CHIP 0.1UF	25V
C0059	1-164-156-11	CERAMIC CHIP 0.1UF	25V
C0060	1-164-230-11	CERAMIC CHIP 220PF	5.00% 50V
C0061	1-164-156-11	CERAMIC CHIP 0.1UF	25V
C0062	1-126-947-11	ELECT 47UF	20.00% 35V
C0063	1-164-230-11	CERAMIC CHIP 220PF	5.00% 50V
C0064	1-164-230-11	CERAMIC CHIP 220PF	5.00% 50V
C0065	1-164-156-11	CERAMIC CHIP 0.1UF	25V
C0066	1-164-156-11	CERAMIC CHIP 0.1UF	25V
C3101	1-127-715-91	CERAMIC CHIP 0.22UF	10% 16V
C3102	1-127-715-91	CERAMIC CHIP 0.22UF	10% 16V
C3103	1-127-715-91	CERAMIC CHIP 0.22UF	10% 16V
C3104	1-127-715-91	CERAMIC CHIP 0.22UF	10% 16V
C3105	1-127-715-91	CERAMIC CHIP 0.22UF	10% 16V
C3106	1-127-715-91	CERAMIC CHIP 0.22UF	10% 16V
C3107	1-165-176-11	CERAMIC CHIP 0.047UF	10.00% 16V
C3108	1-165-176-11	CERAMIC CHIP 0.047UF	10.00% 16V
C3109	1-165-176-11	CERAMIC CHIP 0.047UF	10.00% 16V
C3110	1-165-176-11	CERAMIC CHIP 0.047UF	10.00% 16V
C3121	1-164-156-11	CERAMIC CHIP 0.1UF	25V
C3122	1-164-156-11	CERAMIC CHIP 0.1UF	25V
C3123	1-164-156-11	CERAMIC CHIP 0.1UF	25V
C3124	1-164-156-11	CERAMIC CHIP 0.1UF	25V
C3127	1-165-176-11	CERAMIC CHIP 0.047UF	10.00% 16V
C3129	1-165-176-11	CERAMIC CHIP 0.047UF	10.00% 16V
C3130	1-164-156-11	CERAMIC CHIP 0.1UF	25V
C3131	1-164-156-11	CERAMIC CHIP 0.1UF	25V
C3132	1-164-156-11	CERAMIC CHIP 0.1UF	25V
C3133	1-126-947-11	ELECT 47UF	20.00% 35V
C3134	1-164-156-11	CERAMIC CHIP 0.1UF	25V
C3135	1-162-919-11	CERAMIC CHIP 22PF	5.00% 50V
C3136	1-164-156-11	CERAMIC CHIP 0.1UF	25V
C3137	1-162-919-11	CERAMIC CHIP 22PF	5.00% 50V
C3138	1-164-156-11	CERAMIC CHIP 0.1UF	25V
C3139	1-164-156-11	CERAMIC CHIP 0.1UF	25V
C3140	1-164-156-11	CERAMIC CHIP 0.1UF	25V
C3141	1-164-156-11	CERAMIC CHIP 0.1UF	25V
C3142	1-126-947-11	ELECT 47UF	20.00% 35V
C3143	1-126-947-11	ELECT 47UF	20.00% 35V
C3144	1-126-947-11	ELECT 47UF	20.00% 35V
C3145	1-126-947-11	ELECT 47UF	20.00% 35V
C3147	1-164-156-11	CERAMIC CHIP 0.1UF	25V
C3148	1-164-156-11	CERAMIC CHIP 0.1UF	25V
C3300	1-164-156-11	CERAMIC CHIP 0.1UF	25V
C3301	1-164-156-11	CERAMIC CHIP 0.1UF	25V
C3302	1-164-156-11	CERAMIC CHIP 0.1UF	25V
C3303	1-164-156-11	CERAMIC CHIP 0.1UF	25V
C3304	1-164-156-11	CERAMIC CHIP 0.1UF	25V
C3305	1-164-156-11	CERAMIC CHIP 0.1UF	25V
C3306	1-164-156-11	CERAMIC CHIP 0.1UF	25V
C3307	1-126-947-11	ELECT 47UF	20.00% 35V
C3308	1-164-156-11	CERAMIC CHIP 0.1UF	25V
C3309	1-164-156-11	CERAMIC CHIP 0.1UF	25V
C3310	1-164-156-11	CERAMIC CHIP 0.1UF	25V
C3311	1-164-156-11	CERAMIC CHIP 0.1UF	25V
C3314	1-164-156-11	CERAMIC CHIP 0.1UF	25V
C3315	1-164-156-11	CERAMIC CHIP 0.1UF	25V
C3316	1-164-156-11	CERAMIC CHIP 0.1UF	25V
C3317	1-164-156-11	CERAMIC CHIP 0.1UF	25V
C3318	1-164-156-11	CERAMIC CHIP 0.1UF	25V
C3319	1-126-947-11	ELECT 47UF	20.00% 35V
C3320	1-126-947-11	ELECT 47UF	20.00% 35V
C3321	1-115-758-11	ELECT 470UF	20.00% 16V
C3324	1-164-156-11	CERAMIC CHIP 0.1UF	25V

REF.NO.	PART.NO	DESCRIPTION	REMARK
C3402	1-126-947-11	ELECT 47UF	20.00% 35V
C3403	1-164-156-11	CERAMIC CHIP 0.1UF	25V
C3405	1-164-156-11	CERAMIC CHIP 0.1UF	25V
C3406	1-126-947-11	ELECT 47UF	20.00% 35V
C3407	1-164-156-11	CERAMIC CHIP 0.1UF	25V
C3408	1-126-947-11	ELECT 47UF	20.00% 35V
C3409	1-126-947-11	ELECT 47UF	20.00% 35V
C3410	1-164-156-11	CERAMIC CHIP 0.1UF	25V
C3411	1-164-156-11	CERAMIC CHIP 0.1UF	25V
C3413	1-164-156-11	CERAMIC CHIP 0.1UF	25V
C3431	1-165-176-11	CERAMIC CHIP 0.047UF	10.00% 16V
C3432	1-165-176-11	CERAMIC CHIP 0.047UF	10.00% 16V
C3433	1-165-176-11	CERAMIC CHIP 0.047UF	10.00% 16V
C3436	1-126-947-11	ELECT 47UF	20.00% 35V
C3800	1-164-156-11	CERAMIC CHIP 0.1UF	25V
C3801	1-126-947-11	ELECT 47UF	20.00% 35V
C3802	1-164-156-11	CERAMIC CHIP 0.1UF	25V
C3803	1-164-156-11	CERAMIC CHIP 0.1UF	25V
C3804	1-164-156-11	CERAMIC CHIP 0.1UF	25V
C3805	1-164-156-11	CERAMIC CHIP 0.1UF	25V
C3806	1-164-156-11	CERAMIC CHIP 0.1UF	25V
C3807	1-164-156-11	CERAMIC CHIP 0.1UF	25V
C3808	1-164-156-11	CERAMIC CHIP 0.1UF	25V
C3809	1-126-947-11	ELECT 47UF	20.00% 35V
C3810	1-164-156-11	CERAMIC CHIP 0.1UF	25V
C3811	1-164-156-11	CERAMIC CHIP 0.1UF	25V
C3812	1-126-947-11	ELECT 47UF	20.00% 35V
C3813	1-126-947-11	ELECT 47UF	20.00% 35V
C3814	1-164-156-11	CERAMIC CHIP 0.1UF	25V
C3815	1-164-156-11	CERAMIC CHIP 0.1UF	25V
C3816	1-164-156-11	CERAMIC CHIP 0.1UF	25V
C3817	1-164-156-11	CERAMIC CHIP 0.1UF	25V
C3818	1-164-156-11	CERAMIC CHIP 0.1UF	25V
C3819	1-164-156-11	CERAMIC CHIP 0.1UF	25V
C3820	1-164-156-11	CERAMIC CHIP 0.1UF	25V
C3821	1-164-156-11	CERAMIC CHIP 0.1UF	25V
C3822	1-164-156-11	CERAMIC CHIP 0.1UF	25V
C3823	1-164-156-11	CERAMIC CHIP 0.1UF	25V
C3824	1-164-156-11	CERAMIC CHIP 0.1UF	25V
C3825	1-164-156-11	CERAMIC CHIP 0.1UF	25V
C3826	1-164-156-11	CERAMIC CHIP 0.1UF	25V
C3827	1-164-156-11	CERAMIC CHIP 0.1UF	25V
C3828	1-164-156-11	CERAMIC CHIP 0.1UF	25V
C3829	1-164-156-11	CERAMIC CHIP 0.1UF	25V
C3830	1-164-156-11	CERAMIC CHIP 0.1UF	25V
C3831	1-164-156-11	CERAMIC CHIP 0.1UF	25V
C3832	1-162-964-11	CERAMIC CHIP 0.001UF	10.00% 50V
C3833	1-164-156-11	CERAMIC CHIP 0.1UF	25V
C3834	1-164-156-11	CERAMIC CHIP 0.1UF	25V
C3835	1-164-156-11	CERAMIC CHIP 0.1UF	25V
C3836	1-164-156-11	CERAMIC CHIP 0.1UF	25V
C3837	1-164-156-11	CERAMIC CHIP 0.1UF	25V
C3838	1-164-156-11	CERAMIC CHIP 0.1UF	25V
C3839	1-164-156-11	CERAMIC CHIP 0.1UF	25V
C3840	1-126-947-11	ELECT 47UF	20.00% 35V
C3841	1-162-927-11	CERAMIC CHIP 100PF	5.00% 50V
C3842	1-162-919-11	CERAMIC CHIP 22UF	5.00% 50V
C3844	1-126-947-11	ELECT 47UF	20.00% 35V
C3845	1-126-947-11	ELECT 47UF	20.00% 35V
C3846	1-126-959-11	ELECT 0.47UF	20.00% 50V
C3847	1-164-156-11	CERAMIC CHIP 0.1UF	25V
C3848	1-126-947-11	ELECT 47UF	20.00% 35V
C3849	1-164-388-91	CERAMIC CHIP 270PF	5.00% 50V
C3851	1-126-947-11	ELECT 47UF	20.00% 35V
C3853	1-126-960-11	ELECT 1UF	20.00% 50V
C3854	1-162-968-11	CERAMIC CHIP 0.0047UF	10.00% 50V
C3855	1-162-970-11	CERAMIC CHIP 0.01UF	10.00% 25V
C3856	1-126-947-11	ELECT 47UF	20.00% 35V
C3857	1-164-156-11	CERAMIC CHIP 0.1UF	25V
C3858	1-126-960-11	ELECT 1UF	20.00% 50V
C3859	1-126-947-11	ELECT 47UF	20.00% 35V
C3861	1-162-927-11	CERAMIC CHIP 100PF	5.00% 50V
C3864	1-126-959-11	ELECT 0.47UF	20.00% 50V
C3865	1-126-947-11	ELECT 47UF	20.00% 35V
C3866	1-164-156-11	CERAMIC CHIP 0.1UF	25V
C3867	1-126-963-11	ELECT 4.7UF	20.00% 50V
C3868	1-164-156-11	CERAMIC CHIP 0.1UF	25V
C3869	1-164-156-11	CERAMIC CHIP 0.1UF	25V
C3870	1-164-156-11	CERAMIC CHIP 0.1UF	25V
C3871	1-164-315-11	CERAMIC CHIP 470PF	5.00% 50V
C3872	1-126-947-11	ELECT 47UF	20.00% 35V
C3874	1-164-156-11	CERAMIC CHIP 0.1UF	25V
C3875	1-125-891-11	CERAMIC CHIP 0.47UF	10.00% 10V
C3876	1-164-156-11	CERAMIC CHIP 0.1UF	25V
C3877	1-162-917-11	CERAMIC CHIP 15PF	5.00% 50V
C3879	1-126-947-11	ELECT 47UF	20.00% 35V
C3882	1-164-156-11	CERAMIC CHIP 0.1UF	25V
C3883	1-164-156-11	CERAMIC CHIP 0.1UF	25V
C3884	1-164-156-11	CERAMIC CHIP 0.1UF	25V
C5503	1-162-927-11	CERAMIC CHIP 100PF	5.00% 50V
C5508	1-162-970-11	CERAMIC CHIP 0.01UF	10.00% 25V
C5509	1-162-970-11	CERAMIC CHIP 0.01UF	10.00% 25V
C5510	1-115-416-11	CERAMIC CHIP 0.001UF	5.00% 25V
C5511	1-162-970-11	CERAMIC CHIP 0.01UF	10.00% 25V
C5516	1-164-156-11	CERAMIC CHIP 0.1UF	25V
C5518	1-164-156-11	CERAMIC CHIP 0.1UF	25V
C5558	1-126-947-11	ELECT 47UF	20.00% 35V

REF.NO.	PART.NO	DESCRIPTION	REMARK
		< CONNECTOR >	
CN0004	* 1-564-507-11	PLUG, CONNECTOR 4P	
CN3100	1-794-244-11	CONNECTOR, DIN (PLUG) 96P	
CN3400	* 1-564-524-11	PLUG, CONNECTOR 9P	
CN3401	* 1-764-643-21	PIN, CONNECTOR (SMD) 11P	
		< DIODE >	
D0070	8-719-081-97	DIODE MMDL914T1	
D0071	1-216-864-11	SHORT CHIP 0	
D5500	8-719-069-55	DIODE UDZSTE-175.6B	
D5501	8-719-083-57	DIODE UDZSTE-173.6B	
D5502	6-500-028-01	DIODE MM3Z9V1ST1	
D5504	8-719-081-97	DIODE MMDL914T1	
D5505	8-719-081-97	DIODE MMDL914T1	
D5506	8-719-081-97	DIODE MMDL914T1	
		< FILTER >	
FL3800	1-233-765-21	FILTER	
FL3801	1-233-765-21	FILTER	
		< IC >	
IC0001	6-704-964-01	IC SDA6001-B12T	
IC0002	8-759-682-41	IC M24C32-WMN6T(A)	
IC0003	6-704-312-01	IC K4S641632F-UC75T	
IC0005	6-803-811-01	M27V160-100K1-LE4001	
IC0006	6-702-313-01	PST6001MT	
IC0007	8-759-352-91	IC PST9143NL	
IC3800	6-704-312-01	IC K4S641632F-UC75T	
IC3801	8-752-424-79	IC CXD3804R-T6	
IC3802	8-752-086-80	IC CXA2019AQ-T4	
		< COIL >	
L0002	1-414-928-21	INDUCTOR 1UH	
L0003	1-414-928-21	INDUCTOR 1UH	
L0004	1-414-928-21	INDUCTOR 1UH	
L0006	1-414-928-21	INDUCTOR 1UH	
L0007	1-414-928-21	INDUCTOR 1UH	
L0008	1-414-928-21	INDUCTOR 1UH	
L3100	1-414-928-21	INDUCTOR 1UH	
L3104	1-414-928-21	INDUCTOR 1UH	
L3105	1-414-928-21	INDUCTOR 1UH	
L3106	1-414-928-21	INDUCTOR 1UH	
L3107	1-414-928-21	INDUCTOR 1UH	
L3300	1-414-928-21	INDUCTOR 1UH	
L3301	1-414-928-21	INDUCTOR 1UH	
L3302	1-414-928-21	INDUCTOR 1UH	
L3400	1-414-928-21	INDUCTOR 1UH	
L3401	1-414-928-21	INDUCTOR 1UH	
L3402	1-414-928-21	INDUCTOR 1UH	
L3403	1-414-928-21	INDUCTOR 1UH	
L3404	1-414-928-21	INDUCTOR 1UH	
L3800	1-414-928-21	INDUCTOR 1UH	
L3801	1-414-928-21	INDUCTOR 1UH	
L3802	1-414-928-21	INDUCTOR 1UH	
L3803	1-414-928-21	INDUCTOR 1UH	
L3805	1-414-928-21	INDUCTOR 1UH	
L3806	1-414-928-21	INDUCTOR 1UH	
L3807	1-414-928-21	INDUCTOR 1UH	
L3808	1-412-987-31	INDUCTOR 4.7UH	
L3809	1-414-928-21	INDUCTOR 1UH	
L3810	1-414-928-21	INDUCTOR 1UH	
L3856	1-414-928-21	INDUCTOR 1UH	
L5549	1-414-928-21	INDUCTOR 1UH	
		< TRANSISTOR >	
Q0001	8-729-010-05	TRANSISTOR MSB709-RT1	
Q0002	8-729-010-05	TRANSISTOR MSB709-RT1	
Q0003	8-729-010-05	TRANSISTOR MSB709-RT1	
Q0005	8-729-010-29	TRANSISTOR MSD601-RST1	
Q0075	8-729-010-29	TRANSISTOR MSD601-RST1	
Q3409	8-729-010-29	TRANSISTOR MSD601-RST1	
Q3410	8-729-010-29	TRANSISTOR MSD601-RST1	
Q3800	8-729-010-29	TRANSISTOR MSD601-RST1	
Q3801	8-729-010-29	TRANSISTOR MSD601-RST1	
Q3802	8-729-010-29	TRANSISTOR MSD601-RST1	
Q3803	8-729-010-29	TRANSISTOR MSD601-RST1	
Q3805	8-729-010-29	TRANSISTOR MSD601-RST1	
Q3806	8-729-010-29	TRANSISTOR MSD601-RST1	
Q3807	8-729-010-29	TRANSISTOR MSD601-RST1	
Q3808	8-729-010-29	TRANSISTOR MSD601-RST1	
Q3811	8-729-010-05	TRANSISTOR MSB709-RT1	
Q3812	8-729-010-29	TRANSISTOR MSD601-RST1	
Q3814	8-729-010-29	TRANSISTOR MSD601-RST1	
Q3816	8-729-010-05	TRANSISTOR MSB709-RT1	
Q5500	8-729-010-29	TRANSISTOR MSD601-RST1	
Q5503	8-729-010-29	TRANSISTOR MSD601-RST1	
Q5505	8-729-010-29	TRANSISTOR MSD601-RST1	
Q5507	8-729-010-05	TRANSISTOR MSB709-RT1	
Q5509	8-729-010-29	TRANSISTOR MSD601-RST1	
Q5519	8-729-010-29	TRANSISTOR MSD601-RST1	
Q5550	8-729-010-29	TRANSISTOR MSD601-RST1	
		< RESISTOR >	
JR0002	1-216-821-11	METAL CHIP 1K 5% 1/10W	
JR0003	1-216-864-11	SHORT CHIP 0	
JR0004	1-216-864-11	SHORT CHIP 0	
JR0008	1-216-864-11	SHORT CHIP 0	
JR0010	1-216-864-11	SHORT CHIP 0	

REF.NO.	PART.NO	DESCRIPTION			REMARK
JR0011	1-216-864-11	SHORT CHIP	0		
JR3400	1-216-864-11	SHORT CHIP	0		
JR3404	1-216-864-11	SHORT CHIP	0		
JR3406	1-216-864-11	SHORT CHIP	0		
JR3408	1-216-864-11	SHORT CHIP	0		
JR3409	1-216-864-11	SHORT CHIP	0		
R0001	1-216-833-11	METAL CHIP	10K	5%	1/10W
R0002	1-216-833-11	METAL CHIP	10K	5%	1/10W
R0003	1-216-833-11	METAL CHIP	10K	5%	1/10W
R0004	1-216-816-11	METAL CHIP	390	5%	1/10W
R0005	1-216-816-11	METAL CHIP	390	5%	1/10W
R0006	1-216-816-11	METAL CHIP	390	5%	1/10W
R0007	1-216-817-11	METAL CHIP	470	5%	1/10W
R0008	1-216-817-11	METAL CHIP	470	5%	1/10W
R0009	1-216-817-11	METAL CHIP	470	5%	1/10W
R0011	1-216-864-11	SHORT CHIP	0		
R0014	1-216-805-11	METAL CHIP	47	5%	1/10W
R0015	1-216-805-11	METAL CHIP	47	5%	1/10W
R0016	1-216-805-11	METAL CHIP	47	5%	1/10W
R0018	1-216-864-11	SHORT CHIP	0		
R0019	1-216-809-11	METAL CHIP	100	5%	1/10W
R0020	1-216-833-11	METAL CHIP	10K	5%	1/10W
R0021	1-216-809-11	METAL CHIP	100	5%	1/10W
R0022	1-216-864-11	SHORT CHIP	0		
R0023	1-216-833-11	METAL CHIP	10K	5%	1/10W
R0025	1-216-809-11	METAL CHIP	100	5%	1/10W
R0026	1-216-809-11	METAL CHIP	100	5%	1/10W
R0027	1-216-809-11	METAL CHIP	100	5%	1/10W
R0028	1-216-833-11	METAL CHIP	10K	5%	1/10W
R0029	1-216-809-11	METAL CHIP	100	5%	1/10W
R0030	1-216-809-11	METAL CHIP	100	5%	1/10W
R0031	1-216-809-11	METAL CHIP	100	5%	1/10W
R0032	1-216-827-11	METAL CHIP	3.3K	5%	1/10W
R0033	1-216-827-11	METAL CHIP	3.3K	5%	1/10W
R0034	1-216-825-11	METAL CHIP	2.2K	5%	1/10W
R0035	1-216-809-11	METAL CHIP	100	5%	1/10W
R0036	1-216-809-11	METAL CHIP	100	5%	1/10W
R0037	1-216-809-11	METAL CHIP	100	5%	1/10W
R0038	1-216-825-11	METAL CHIP	2.2K	5%	1/10W
R0039	1-216-809-11	METAL CHIP	100	5%	1/10W
R0040	1-216-809-11	METAL CHIP	100	5%	1/10W
R0042	1-216-809-11	METAL CHIP	100	5%	1/10W
R0043	1-216-864-11	SHORT CHIP	0		
R0044	1-216-809-11	METAL CHIP	100	5%	1/10W
R0045	1-216-809-11	METAL CHIP	100	5%	1/10W
R0046	1-216-833-11	METAL CHIP	10K	5%	1/10W
R0047	1-216-809-11	METAL CHIP	100	5%	1/10W
R0048	1-216-809-11	METAL CHIP	100	5%	1/10W
R0049	1-216-809-11	METAL CHIP	100	5%	1/10W
R0052	1-216-809-11	METAL CHIP	100	5%	1/10W
R0053	1-216-829-11	METAL CHIP	4.7K	5%	1/10W
R0056	1-216-809-11	METAL CHIP	100	5%	1/10W
R0057	1-216-809-11	METAL CHIP	100	5%	1/10W
R0059	1-216-809-11	METAL CHIP	100	5%	1/10W
R0060	1-216-809-11	METAL CHIP	100	5%	1/10W
R0063	1-216-809-11	METAL CHIP	100	5%	1/10W
R0064	1-216-809-11	METAL CHIP	100	5%	1/10W
R0065	1-216-833-11	METAL CHIP	10K	5%	1/10W
R0066	1-216-833-11	METAL CHIP	10K	5%	1/10W
R0067	1-216-833-11	METAL CHIP	10K	5%	1/10W
R0068	1-216-833-11	METAL CHIP	10K	5%	1/10W
R0069	1-216-833-11	METAL CHIP	10K	5%	1/10W
R0070	1-216-809-11	METAL CHIP	100	5%	1/10W
R0071	1-216-849-11	METAL CHIP	220K	5%	1/10W
R0072	1-216-829-11	METAL CHIP	4.7K	5%	1/10W
R0073	1-216-833-11	METAL CHIP	10K	5%	1/10W
R0074	1-216-864-11	SHORT CHIP	0		
R0075	1-216-809-11	METAL CHIP	100	5%	1/10W
R0076	1-216-864-11	SHORT CHIP	0		
R0079	1-216-864-11	SHORT CHIP	0		
R0080	1-216-827-11	METAL CHIP	3.3K	5%	1/10W
R0081	1-216-827-11	METAL CHIP	3.3K	5%	1/10W
R0082	1-216-809-11	METAL CHIP	100	5%	1/10W
R0083	1-216-809-11	METAL CHIP	100	5%	1/10W
R0084	1-216-833-11	METAL CHIP	10K	5%	1/10W
R0085	1-216-829-11	METAL CHIP	4.7K	5%	1/10W
R0086	1-216-809-11	METAL CHIP	100	5%	1/10W
R0087	1-216-809-11	METAL CHIP	100	5%	1/10W
R0088	1-216-809-11	METAL CHIP	100	5%	1/10W
R0092	1-216-829-11	METAL CHIP	4.7K	5%	1/10W
R0093	1-216-833-11	METAL CHIP	10K	5%	1/10W
R0095	1-216-864-11	SHORT CHIP	0		
R0099	1-216-833-11	METAL CHIP	10K	5%	1/10W
R0102	1-216-864-11	SHORT CHIP	0		
R0108	1-216-864-11	SHORT CHIP	0		
R0137	1-216-833-11	METAL CHIP	10K	5%	1/10W
R3100	1-216-864-11	SHORT CHIP	0		
R3101	1-216-864-11	SHORT CHIP	0		
R3103	1-216-864-11	SHORT CHIP	0		
R3104	1-216-864-11	SHORT CHIP	0		
R3106	1-216-864-11	SHORT CHIP	0		
R3108	1-216-864-11	SHORT CHIP	0		
R3109	1-216-809-11	METAL CHIP	100	5%	1/10W
R3110	1-216-809-11	METAL CHIP	100	5%	1/10W
R3112	1-216-809-11	METAL CHIP	100	5%	1/10W
R3113	1-216-809-11	METAL CHIP	100	5%	1/10W
R3165	1-216-845-11	METAL CHIP	100K	5%	1/10W
R3210	1-216-864-11	SHORT CHIP	0		
R3211	1-216-864-11	SHORT CHIP	0		

REF.NO.	PART.NO	DESCRIPTION			REMARK
R3212	1-216-864-11	SHORT CHIP	0		
R3240	1-216-864-11	SHORT CHIP	0		
R3241	1-216-864-11	SHORT CHIP	0		
R3242	1-216-864-11	SHORT CHIP	0		
R3270	1-216-864-11	SHORT CHIP	0		
R3271	1-216-864-11	SHORT CHIP	0		
R3272	1-216-864-11	SHORT CHIP	0		
R3300	1-216-809-11	METAL CHIP	100	5%	1/10W
R3301	1-216-809-11	METAL CHIP	100	5%	1/10W
R3303	1-216-864-11	SHORT CHIP	0		
R3306	1-216-864-11	SHORT CHIP	0		
R3307	1-216-864-11	SHORT CHIP	0		
R3313	1-216-864-11	SHORT CHIP	0		
R3401	1-216-821-11	METAL CHIP	1K	5%	1/10W
R3404	1-216-864-11	SHORT CHIP	0		
R3407	1-216-864-11	SHORT CHIP	0		
R3411	1-216-864-11	SHORT CHIP	0		
R3413	1-216-864-11	SHORT CHIP	0		
R3414	1-216-809-11	METAL CHIP	100	5%	1/10W
R3419	1-216-817-11	METAL CHIP	470	5%	1/10W
R3421	1-216-817-11	METAL CHIP	470	5%	1/10W
R3422	1-216-809-11	METAL CHIP	100	5%	1/10W
R3423	1-216-817-11	METAL CHIP	470	5%	1/10W
R3435	1-216-864-11	SHORT CHIP	0		
R3437	1-216-864-11	SHORT CHIP	0		
R3438	1-216-864-11	SHORT CHIP	0		
R3441	1-216-864-11	SHORT CHIP	0		
R3442	1-216-864-11	SHORT CHIP	0		
R3443	1-218-847-11	METAL CHIP	1K	0.5%	1/10W
R3444	1-216-809-11	METAL CHIP	100	5%	1/10W
R3445	1-216-809-11	METAL CHIP	100	5%	1/10W
R3447	1-216-864-11	SHORT CHIP	0		
R3451	1-216-829-11	METAL CHIP	4.7K	5%	1/10W
R3452	1-216-817-11	METAL CHIP	470	5%	1/10W
R3800	1-216-864-11	SHORT CHIP	0		
R3801	1-216-841-11	METAL CHIP	47K	5%	1/10W
R3802	1-216-841-11	METAL CHIP	47K	5%	1/10W
R3803	1-216-813-11	METAL CHIP	220	5%	1/10W
R3804	1-216-830-11	METAL CHIP	5.6K	5%	1/10W
R3806	1-216-864-11	SHORT CHIP	0		
R3807	1-216-818-11	METAL CHIP	560	5%	1/10W
R3808	1-216-864-11	SHORT CHIP	0		
R3810	1-216-817-11	METAL CHIP	470	5%	1/10W
R3811	1-216-817-11	METAL CHIP	470	5%	1/10W
R3812	1-414-760-21	FERRITE	0UH		
R3814	1-216-864-11	SHORT CHIP	0		
R3815	1-216-841-11	METAL CHIP	47K	5%	1/10W
R3816	1-216-830-11	METAL CHIP	5.6K	5%	1/10W
R3817	1-216-841-11	METAL CHIP	47K	5%	1/10W
R3818	1-216-813-11	METAL CHIP	220	5%	1/10W
R3820	1-216-864-11	SHORT CHIP	0		
R3821	1-216-864-11	SHORT CHIP	0		
R3822	1-216-818-11	METAL CHIP	560	5%	1/10W
R3823	1-216-864-11	SHORT CHIP	0		
R3825	1-216-817-11	METAL CHIP	470	5%	1/10W
R3826	1-216-817-11	METAL CHIP	470	5%	1/10W
R3829	1-216-817-11	METAL CHIP	470	5%	1/10W
R3830	1-216-841-11	METAL CHIP	47K	5%	1/10W
R3833	1-216-809-11	METAL CHIP	100	5%	1/10W
R3834	1-216-841-11	METAL CHIP	47K	5%	1/10W
R3836	1-216-817-11	METAL CHIP	470	5%	1/10W
R3837	1-216-817-11	METAL CHIP	470	5%	1/10W
R3838	1-216-864-11	SHORT CHIP	0		
R3839	1-216-817-11	METAL CHIP	470	5%	1/10W
R3840	1-216-864-11	SHORT CHIP	0		
R3841	1-216-817-11	METAL CHIP	470	5%	1/10W
R3845	1-216-801-11	METAL CHIP	22	5%	1/10W
R3846	1-216-809-11	METAL CHIP	100	5%	1/10W
R3847	1-216-809-11	METAL CHIP	100	5%	1/10W
R3849	1-216-801-11	METAL CHIP	22	5%	1/10W
R3850	1-218-851-11	METAL CHIP	1.5K	0.5%	1/10W
R3851	1-218-859-11	METAL CHIP	3.3K	0.5%	1/10W
R3852	1-218-831-11	METAL CHIP	220	0.5%	1/10W
R3853	1-216-809-11	METAL CHIP	100	5%	1/10W
R3854	1-216-821-11	METAL CHIP	1K	5%	1/10W
R3855	1-218-839-11	METAL CHIP	470	0.5%	1/10W
R3856	1-216-829-11	METAL CHIP	4.7K	5%	1/10W
R3857	1-216-827-11	METAL CHIP	3.3K	5%	1/10W
R3859	1-216-821-11	METAL CHIP	1K	5%	1/10W
R3860	1-216-813-11	METAL CHIP	220	5%	1/10W
R3861	1-216-821-11	METAL CHIP	1K	5%	1/10W
R3862	1-216-809-11	METAL CHIP	100	5%	1/10W
R3863	1-216-864-11	SHORT CHIP	0		
R3864	1-216-809-11	METAL CHIP	100	5%	1/10W
R3865	1-216-864-11	SHORT CHIP	0		
R3866	1-216-864-11	SHORT CHIP	0		
R3868	1-216-817-11	METAL CHIP	470	5%	1/10W
R3869	1-216-864-11	SHORT CHIP	0		
R3870	1-218-907-11	METAL CHIP	330K	0.5%	1/10W
R3871	1-216-825-11	METAL CHIP	2.2K	5%	1/10W
R3874	1-216-819-11	METAL CHIP	680	5%	1/10W
R3875	1-216-825-11	METAL CHIP	2.2K	5%	1/10W
R3876	1-218-835-11	METAL CHIP	330	0.5%	1/10W
R3877	1-216-832-11	METAL CHIP	8.2K	5%	1/10W
R3878	1-216-813-11	METAL CHIP	220	5%	1/10W
R3879	1-216-809-11	METAL CHIP	100	5%	1/10W
R3881	1-216-833-11	METAL CHIP	10K	5%	1/10W
R3882	1-216-809-11	METAL CHIP	100	5%	1/10W
R3883	1-216-809-11	METAL CHIP	100	5%	1/10W
R3884	1-218-859-11	METAL CHIP	3.3K	0.5%	1/10W

REF.NO.	PART.NO	DESCRIPTION	REMARK
R3888	1-216-829-11	METAL CHIP 4.7K 5%	1/10W
R3890	1-216-864-11	SHORT CHIP 0	
R3892	1-216-864-11	SHORT CHIP 0	
R3893	1-216-835-11	METAL CHIP 15K 5%	1/10W
R3894	1-216-817-11	METAL CHIP 470 5%	1/10W
R5501	1-216-821-11	METAL CHIP 1K 5%	1/10W
R5502	1-216-809-11	METAL CHIP 100 5%	1/10W
R5504	1-216-809-11	METAL CHIP 100 5%	1/10W
R5505	1-216-809-11	METAL CHIP 100 5%	1/10W
R5510	1-216-809-11	METAL CHIP 100 5%	1/10W
R5511	1-216-809-11	METAL CHIP 100 5%	1/10W
R5512	1-216-838-11	METAL CHIP 27K 5%	1/10W
R5516	1-218-831-11	METAL CHIP 220 0.5%	1/10W
R5517	1-216-809-11	METAL CHIP 100 5%	1/10W
R5518	1-216-809-11	METAL CHIP 100 5%	1/10W
R5523	1-218-855-11	METAL CHIP 2.2K 0.5%	1/10W
R5524	1-216-838-11	METAL CHIP 27K 5%	1/10W
R5526	1-216-821-11	METAL CHIP 1K 5%	1/10W
R5528	1-216-833-11	METAL CHIP 10K 5%	1/10W
R5529	1-216-833-11	METAL CHIP 10K 5%	1/10W
R5532	1-216-821-11	METAL CHIP 1K 5%	1/10W
R5539	1-218-879-11	METAL CHIP 22K 0.5%	1/10W
R5540	1-216-838-11	METAL CHIP 27K 5%	1/10W
R5541	1-216-821-11	METAL CHIP 1K 5%	1/10W
R5543	1-216-832-11	METAL CHIP 8.2K 5%	1/10W
R5544	1-216-826-11	METAL CHIP 2.7K 5%	1/10W
R5545	1-218-895-11	METAL CHIP 100K 0.5%	1/10W
R5547	1-216-833-11	METAL CHIP 10K 5%	1/10W
R5548	1-216-838-11	METAL CHIP 27K 5%	1/10W
R5549	1-216-829-11	METAL CHIP 4.7K 5%	1/10W
R5550	1-216-829-11	METAL CHIP 4.7K 5%	1/10W
R5551	1-216-829-11	METAL CHIP 4.7K 5%	1/10W
R5552	1-216-829-11	METAL CHIP 4.7K 5%	1/10W
R5555	1-216-829-11	METAL CHIP 4.7K 5%	1/10W
R5556	1-216-829-11	METAL CHIP 4.7K 5%	1/10W
R5557	1-216-809-11	METAL CHIP 100 5%	1/10W
R5558	1-216-809-11	METAL CHIP 100 5%	1/10W
R5559	1-216-864-11	SHORT CHIP 0	
R5560	1-216-833-11	METAL CHIP 10K 5%	1/10W
R5561	1-216-821-11	METAL CHIP 1K 5%	1/10W
R5569	1-216-864-11	SHORT CHIP 0	
R5576	1-216-864-11	SHORT CHIP 0	
R5577	1-216-864-11	SHORT CHIP 0	
R5578	1-216-864-11	SHORT CHIP 0	
R5579	1-216-864-11	SHORT CHIP 0	
R5580	1-216-864-11	SHORT CHIP 0	

< RESISTOR CHIP >

RB0030	1-233-576-11	RES, CHIP NETWORK 100	
RB0031	1-233-576-11	RES, CHIP NETWORK 100	
RB0032	1-233-576-11	RES, CHIP NETWORK 100	
RB0033	1-233-576-11	RES, CHIP NETWORK 100	
RB0034	1-233-576-11	RES, CHIP NETWORK 100	
RB0035	1-233-576-11	RES, CHIP NETWORK 100	
RB0036	1-233-576-11	RES, CHIP NETWORK 100	
RB0037	1-233-576-11	RES, CHIP NETWORK 100	
RB0038	1-233-576-11	RES, CHIP NETWORK 100	
RB0039	1-233-576-11	RES, CHIP NETWORK 100	
RB0043	1-233-576-11	RES, CHIP NETWORK 100	
RB0044	1-233-576-11	RES, CHIP NETWORK 100	
RB0045	1-233-576-11	RES, CHIP NETWORK 100	
RB0050	1-233-576-11	RES, CHIP NETWORK 100	
RB0051	1-233-576-11	RES, CHIP NETWORK 100	
RB0052	1-233-576-11	RES, CHIP NETWORK 100	
RB0053	1-233-576-11	RES, CHIP NETWORK 100	
RB0054	1-233-576-11	RES, CHIP NETWORK 100	
RB0055	1-233-576-11	RES, CHIP NETWORK 100	
RB3800	1-239-621-11	NETWORK RESISTOR (CHIP) 22	
RB3801	1-239-621-11	NETWORK RESISTOR (CHIP) 22	
RB3802	1-239-621-11	NETWORK RESISTOR (CHIP) 22	
RB3803	1-239-621-11	NETWORK RESISTOR (CHIP) 22	
RB3804	1-239-621-11	NETWORK RESISTOR (CHIP) 22	
RB3805	1-239-621-11	NETWORK RESISTOR (CHIP) 22	
RB3806	1-239-621-11	NETWORK RESISTOR (CHIP) 22	
RB3807	1-239-621-11	NETWORK RESISTOR (CHIP) 22	
RB3808	1-239-621-11	NETWORK RESISTOR (CHIP) 22	

< CRYSTAL >

X0001	1-567-162-00	OSCILLATOR, CRYSTAL
X3100	1-781-946-21	VIBRATOR, CRYSTAL
X3400	1-795-058-21	VIBRATOR, CERAMIC
X3800	1-767-127-11	VIBRATOR, CERAMIC
X3801	1-567-504-11	OSCILLATOR, CRYSTAL

* A-1405-803-A A Board, Complete

	4-382-854-01	SCREW (M3X8), P, SW (+)

< CAPACITOR >

C0001	1-162-927-11	CERAMIC CHIP 100PF	5.00%	50V
C0002	1-162-927-11	CERAMIC CHIP 100PF	5.00%	50V
C1103	1-162-927-11	CERAMIC CHIP 100PF	5.00%	50V
C1104	1-162-927-11	CERAMIC CHIP 100PF	5.00%	50V
C1106	1-164-156-11	CERAMIC CHIP 0.1UF		25V
C1108	1-164-156-11	CERAMIC CHIP 0.1UF		25V
C1109	1-162-921-11	CERAMIC CHIP 33PF	5.00%	50V
C1300	1-162-968-11	CERAMIC CHIP 0.0047UF	10.00%	50V
C1302	1-216-864-11	SHORT CHIP 0		
C1303	1-162-928-11	CERAMIC CHIP 120PF	5.00%	50V

REF.NO.	PART.NO	DESCRIPTION	REMARK
C1304	1-216-864-11	SHORT CHIP 0	
C1307	1-125-891-11	CERAMIC CHIP 0.47UF	10.00% 10V
C1904	1-163-009-91	CERAMIC CHIP 0.001UF	10.00% 50V
C2000	1-126-947-11	ELECT 47UF	20.00% 35V
C2001	1-164-156-11	CERAMIC CHIP 0.1UF	25V
C2002	1-126-935-11	ELECT 470UF	20.00% 16V
C2004	1-164-004-11	CERAMIC CHIP 0.1UF	10.00% 25V
C2005	1-127-715-91	CERAMIC CHIP 0.22UF	10% 16V
C2006	1-162-964-11	CERAMIC CHIP 0.001UF	10.00% 50V
C2007	1-162-966-11	CERAMIC CHIP 0.0022UF	10.00% 50V
C2009	1-127-715-91	CERAMIC CHIP 0.22UF	10% 16V
C2010	1-127-715-91	CERAMIC CHIP 0.22UF	10% 16V
C2011	1-162-966-11	CERAMIC CHIP 0.0022UF	10.00% 50V
C2012	1-162-966-11	CERAMIC CHIP 0.0022UF	10.00% 50V
C2013	1-162-966-11	CERAMIC CHIP 0.0022UF	10.00% 50V
C2014	1-127-715-91	CERAMIC CHIP 0.22UF	10% 16V
C2016	1-162-927-11	CERAMIC CHIP 100PF	5.00% 50V
C2017	1-126-964-11	ELECT 10UF	20.00% 50V
C2018	1-126-964-11	ELECT 10UF	20.00% 50V
C2019	1-126-947-11	ELECT 47UF	20.00% 35V
C2020	1-126-947-11	ELECT 47UF	20.00% 35V
C2021	1-164-156-11	CERAMIC CHIP 0.1UF	25V
C2022	1-126-964-11	ELECT 10UF	20.00% 50V
C2023	1-164-156-11	CERAMIC CHIP 0.1UF	25V
C2024	1-126-964-11	ELECT 10UF	20.00% 50V
C2025	1-162-964-11	CERAMIC CHIP 0.001UF	10.00% 50V
C2026	1-164-156-11	CERAMIC CHIP 0.1UF	25V
C2027	1-164-156-11	CERAMIC CHIP 0.1UF	25V
C2028	1-162-906-11	CERAMIC CHIP 1.5PF	0.25PF 50V
C2029	1-162-906-11	CERAMIC CHIP 1.5PF	0.25PF 50V
C2030	1-127-715-91	CERAMIC CHIP 0.22UF	10% 16V
C2031	1-127-715-91	CERAMIC CHIP 0.22UF	10% 16V
C2032	1-127-715-91	CERAMIC CHIP 0.22UF	10% 16V
C2033	1-162-964-11	CERAMIC CHIP 0.001UF	10.00% 50V
C2034	1-125-891-11	CERAMIC CHIP 0.47UF	10.00% 10V
C2035	1-125-891-11	CERAMIC CHIP 0.47UF	10.00% 10V
C2040	1-162-927-11	CERAMIC CHIP 100PF	5.00% 50V
C2400	1-136-175-00	FILM 0.68UF	5.00% 50V
C2401	1-165-128-11	CERAMIC CHIP 0.22UF	16V
C2402	1-163-135-00	CERAMIC CHIP 560PF	5.00% 50V
C2403	1-115-339-11	CERAMIC CHIP 0.1UF	10.00% 50V
C2404	1-162-966-11	CERAMIC CHIP 0.0022UF	10.00% 50V
C2405	1-162-927-11	CERAMIC CHIP 100PF	5.00% 50V
C2406	1-163-021-91	CERAMIC CHIP 0.01UF	10.00% 50V
C2407	1-164-505-11	CERAMIC CHIP 2.2UF	16V
C2409	1-115-339-11	CERAMIC CHIP 0.1UF	10.00% 50V
C2410	1-164-156-11	CERAMIC CHIP 0.1UF	25V
C2411	1-164-156-11	CERAMIC CHIP 0.1UF	25V
C2412	1-126-943-11	ELECT 2200UF	20.00% 25V
C2413	1-126-943-11	ELECT 2200UF	20.00% 25V
C2414	1-164-156-11	CERAMIC CHIP 0.1UF	25V
C2500	1-126-952-11	ELECT 1000UF	20.00% 35V
C2501	1-126-952-11	ELECT 1000UF	20.00% 35V
C2502	1-164-156-11	CERAMIC CHIP 0.1UF	25V
C2503	1-164-156-11	CERAMIC CHIP 0.1UF	25V
C2504	1-126-964-11	ELECT 10UF	20.00% 50V
C2505	1-126-947-11	ELECT 47UF	20.00% 35V
C2506	1-126-947-11	ELECT 47UF	20.00% 35V
C2507	1-126-964-11	ELECT 10UF	20.00% 50V
C2508	1-126-960-11	ELECT 1UF	20.00% 50V
C2511	1-126-947-11	ELECT 47UF	20.00% 35V
C2512	1-164-004-11	CERAMIC CHIP 0.1UF	10.00% 25V
C2513	1-164-004-11	CERAMIC CHIP 0.1UF	10.00% 25V
C2514	1-107-715-11	ELECT 22UF	20.00% 50V
C6200	1-164-156-11	CERAMIC CHIP 0.1UF	25V
C6201	1-164-156-11	CERAMIC CHIP 0.1UF	25V
C6202	1-164-156-11	CERAMIC CHIP 0.1UF	25V
C6203	1-164-156-11	CERAMIC CHIP 0.1UF	25V
C6204	1-164-156-11	CERAMIC CHIP 0.1UF	25V
C6205	1-164-156-11	CERAMIC CHIP 0.1UF	25V
C6206	1-104-665-11	ELECT 100UF	20.00% 25V
C6207	1-104-665-11	ELECT 100UF	20.00% 25V
C6208	1-104-665-11	ELECT 100UF	20.00% 25V
C6209	1-104-665-11	ELECT 100UF	20.00% 25V
C6210	1-104-665-11	ELECT 100UF	20.00% 25V
C6211	1-104-665-11	ELECT 100UF	20.00% 25V
C6212	1-104-665-11	ELECT 100UF	20.00% 25V
C6213	1-164-156-11	CERAMIC CHIP 0.1UF	25V
C6214	1-104-665-11	ELECT 100UF	20.00% 25V
C6215	1-104-665-11	ELECT 100UF	20.00% 25V
C6216	1-126-972-11	ELECT 1000UF	20.00% 50V
C6217	1-126-972-11	ELECT 1000UF	20.00% 50V
C6218	1-126-972-11	ELECT 1000UF	20.00% 50V
C6222	1-136-165-00	FILM 0.1UF	5.00% 50V
C6223	1-136-165-00	FILM 0.1UF	5.00% 50V
C6225	1-126-767-11	ELECT 1000UF	20.00% 16V
C6226	1-126-767-11	ELECT 1000UF	20.00% 16V
C6227	1-126-767-11	ELECT 1000UF	20.00% 16V
C6231	1-164-156-11	CERAMIC CHIP 0.1UF	25V
C6232	1-164-156-11	CERAMIC CHIP 0.1UF	25V
C6233	1-126-947-11	ELECT 47UF	20.00% 35V
C6234	1-126-947-11	ELECT 47UF	20.00% 35V
C6235	1-164-156-11	CERAMIC CHIP 0.1UF	25V
C6236	1-164-156-11	CERAMIC CHIP 0.1UF	25V
C6237	1-104-665-11	ELECT 100UF	20.00% 25V
C6238	1-104-665-11	ELECT 100UF	20.00% 25V
C6239	1-164-156-11	CERAMIC CHIP 0.1UF	25V
C6240	1-164-156-11	CERAMIC CHIP 0.1UF	25V
C6241	1-164-156-11	CERAMIC CHIP 0.1UF	25V
C6242	1-104-665-11	ELECT 100UF	20.00% 25V

REF.NO.	PART.NO	DESCRIPTION	REMARK
C6243	1-104-665-11	ELECT 100UF	20.00% 25V
C6244	1-126-947-11	ELECT 47UF	20.00% 35V
C6245	1-126-947-11	ELECT 47UF	20.00% 35V
C6247	1-126-964-11	ELECT 10UF	20.00% 50V
C6248	1-164-156-11	CERAMIC CHIP 0.1UF	25V
C6249	1-104-665-11	ELECT 100UF	20.00% 25V
C6250	1-104-665-11	ELECT 100UF	20.00% 25V
C6251	1-164-156-11	CERAMIC CHIP 0.1UF	25V
C6252	1-164-156-11	CERAMIC CHIP 0.1UF	25V
C6253	1-104-665-11	ELECT 100UF	20.00% 25V
C6254	1-104-665-11	ELECT 100UF	20.00% 25V
C6255	1-164-156-11	CERAMIC CHIP 0.1UF	25V
C6256	1-164-156-11	CERAMIC CHIP 0.1UF	25V
C6257	1-164-156-11	CERAMIC CHIP 0.1UF	25V
C6258	1-104-665-11	ELECT 100UF	20.00% 25V
C6259	1-104-665-11	ELECT 100UF	20.00% 25V
C6260	1-164-156-11	CERAMIC CHIP 0.1UF	25V
C6262	1-126-933-11	ELECT 100UF	20.00% 16V
C6263	1-164-156-11	CERAMIC CHIP 0.1UF	25V
C6264	1-164-156-11	CERAMIC CHIP 0.1UF	25V
C6265	1-164-156-11	CERAMIC CHIP 0.1UF	25V
C6266	1-164-156-11	CERAMIC CHIP 0.1UF	25V
C6267	1-164-156-11	CERAMIC CHIP 0.1UF	25V
C6268	1-164-156-11	CERAMIC CHIP 0.1UF	25V
C6269	1-164-156-11	CERAMIC CHIP 0.1UF	25V
C6270	1-164-156-11	CERAMIC CHIP 0.1UF	25V
C8353	1-164-346-11	CERAMIC CHIP 1UF	16V
C8354	1-164-346-11	CERAMIC CHIP 1UF	16V
C8355	1-126-935-11	ELECT 470UF	20.00% 16V
C8356	1-126-382-11	ELECT 100UF	20.00% 16V
C8357	1-126-933-11	ELECT 100UF	20.00% 16V
C8358	1-126-933-11	ELECT 100UF	20.00% 16V
C8359	1-126-382-11	ELECT 100UF	20.00% 16V
C8360	1-164-004-11	CERAMIC CHIP 0.1UF	10.00% 25V
C8361	1-164-004-11	CERAMIC CHIP 0.1UF	10.00% 25V
		< CONNECTOR >	
CN0001	1-764-333-11	PIN, CONNECTOR(PCB)(V TYPE)10P	
CN2002	* 1-816-974-51	PLUG, CONNECTOR 3P	
CN2003	1-564-507-11	PLUG, CONNECTOR 4P	
CN2004	1-564-505-11	PLUG, CONNECTOR 2P	
CN2301	* 1-816-976-51	PLUG, CONNECTOR 5P	
CN3000	1-764-334-11	PIN, CONNECTOR(PCB)(V TYPE)11P	
CN3001	* 1-816-983-71	PLUG, CONNECTOR 6P	
CN5000	1-817-115-11	CONNECTOR, BOARD TO BOARD, 35P	
CN5201	* 1-794-243-11	CONNECTOR, DIN (RECEPTACLE)96P	
CN5209	* 1-564-520-11	PLUG, CONNECTOR 5P	
CN6200	* 1-816-985-71	PLUG, CONNECTOR 8P	
CN6201	* 1-580-838-11	PIN, CONNECTOR (PC BOARD) 4P	
CN6202	* 1-564-510-11	PLUG, CONNECTOR 7P	
CN6204	1-695-915-11	TAB (CONTACT)	
CN6205	1-695-915-11	TAB (CONTACT)	
CN6206	* 1-816-977-51	PLUG, CONNECTOR 6P	
CN6207	* 1-564-512-11	PLUG, CONNECTOR 9P	
CN6208	* 1-564-512-11	PLUG, CONNECTOR 9P	
CN6210	1-764-333-11	PIN, CONNECTOR(PCB)(V TYPE)10P	
CN6900	* 1-816-976-51	PLUG, CONNECTOR 5P	
		< DIODE >	
D0200	8-719-050-37	DIODE M1MA152WA-T1	
D1906	8-719-069-55	DIODE UDZSTE-175.6B	
D1918	8-719-081-97	DIODE MMDL914T1	
D2004	8-719-081-97	DIODE MMDL914T1	
D6200	8-719-500-70	DIODE D5S4M	
D6201	8-719-500-70	DIODE D5S4M	
D6202	8-719-500-70	DIODE D5S4M	
D6203	8-719-081-97	DIODE MMDL914T1	
D6204	8-719-081-97	DIODE MMDL914T1	
D6205	8-719-083-57	DIODE UDZSTE-173.6B	
D6206	8-719-081-97	DIODE MMDL914T1	
D6207	8-719-081-97	DIODE MMDL914T1	
D6208	8-719-081-97	DIODE MMDL914T1	
D6209	8-719-081-97	DIODE MMDL914T1	
D6210	8-719-050-38	DIODE M1MA152WK-T1	
D8481	8-719-050-38	DIODE M1MA152WK-T1	
		< FERRITE BEAD >	
FB1101	1-412-987-31	INDUCTOR 4.7UH	
		< IC >	
IC1000	8-752-072-94	IC CXA1875AM-T4	
IC2000	6-701-031-11	IC MSP3411G-QA-B11	
IC2300	8-759-576-76	IC TDA2822D013TR	
IC2400	8-759-544-25	IC TDA7482	
IC2500	8-759-590-05	IC TDA7269A	
IC6200	8-759-648-20	IC L7805CV/LSY	
IC6201	8-759-445-59	IC BA033T	
IC6202	8-759-098-24	IC PQ30RV11	
IC6203	8-759-098-24	IC PQ30RV11	
IC6204	8-759-394-36	IC BA09T	
IC6205	8-759-098-24	IC PQ30RV11	
IC6206	8-759-474-09	IC SI-8050S-LF1101	
IC6207	8-759-659-28	IC SI-8033S	
IC6208	8-759-640-19	IC PQ1CG2032FZ	
IC6209	8-759-098-24	IC PQ30RV11	
IC6210	8-759-520-49	IC PQ30RV21	
IC6211	8-759-098-24	IC PQ30RV11	
IC6212	8-759-098-24	IC PQ30RV11	
IC6213	8-759-098-24	IC PQ30RV11	

Note : The components identified by shading and marked ⚠ are critical for safety. Replace only with the part numbers specified in the parts list.

A

REF.NO.	PART.NO	DESCRIPTION	REMARK
		< SOCKET >	
J2200	1-784-632-11	JACK, PIN 2P	
		< COIL >	
L0001	1-412-987-31	INDUCTOR 4.7UH	
L1100	1-414-580-21	INDUCTOR CHIP 100NH	
L1101	1-414-580-21	INDUCTOR CHIP 100NH	
L1102	1-535-303-00	LEAD, JUMPER (5.0MM)	
L1103	1-535-303-00	LEAD, JUMPER (5.0MM)	
L1104	1-412-979-21	INDUCTOR 1UH	
L1301	1-408-602-31	INDUCTOR 8.2UH	
L2000	1-414-928-21	INDUCTOR 1UH	
L2001	1-414-928-21	INDUCTOR 1UH	
L2011	1-414-928-21	INDUCTOR 1UH	
L2221	1-535-303-00	LEAD, JUMPER (5.0MM)	
L2222	1-535-303-00	LEAD, JUMPER (5.0MM)	
L2400	1-416-857-11	INDUCTOR 65UH	
L2401	1-535-303-00	LEAD, JUMPER (5.0MM)	
L2402	1-535-303-00	LEAD, JUMPER (5.0MM)	
L2500	1-535-303-00	LEAD, JUMPER (5.0MM)	
L2501	1-535-303-00	LEAD, JUMPER (5.0MM)	
L6200	1-406-662-11	INDUCTOR 33UH	
L6201	1-406-662-11	INDUCTOR 33UH	
L6202	1-406-662-11	INDUCTOR 33UH	
L6203	1-406-662-11	INDUCTOR 33UH	
L6204	1-406-662-11	INDUCTOR 33UH	
L6205	1-406-662-11	INDUCTOR 33UH	
L6206	1-412-525-31	INDUCTOR 10UH	
L6207	1-412-525-31	INDUCTOR 10UH	
L6208	1-412-525-31	INDUCTOR 10UH	
L6209	1-535-303-00	LEAD, JUMPER (5.0MM)	
L6210	1-414-928-21	INDUCTOR 1UH	
L6211	1-414-928-21	INDUCTOR 1UH	
L8200	1-535-303-00	LEAD, JUMPER (5.0MM)	
L8201	1-535-303-00	LEAD, JUMPER (5.0MM)	
L8202	1-535-303-00	LEAD, JUMPER (5.0MM)	
L8203	1-535-303-00	LEAD, JUMPER (5.0MM)	
L8204	1-535-303-00	LEAD, JUMPER (5.0MM)	
L8206	1-535-303-00	LEAD, JUMPER (5.0MM)	
L8207	1-535-303-00	LEAD, JUMPER (5.0MM)	
		< PROTECTOR MODULE >	
PS2000 ⚠	1-801-549-21	IC LINK 4A	MP250
PS2001 ⚠	1-801-549-21	IC LINK 4A	MP250
PS6201 ⚠	1-533-595-31	IC LINK 3.15A	90V
PS6202 ⚠	1-533-595-31	IC LINK 3.15A	90V
PS6203 ⚠	1-533-595-31	IC LINK 3.15A	90V

REF.NO.	PART.NO	DESCRIPTION	REMARK
		< TRANSISTOR >	
Q0200	8-729-028-28	TRANSISTOR 2SK2036(TE85L)	
Q0201	8-729-028-28	TRANSISTOR 2SK2036(TE85L)	
Q1300	8-729-010-29	TRANSISTOR MSD601-RST1	
Q1301	8-729-010-05	TRANSISTOR MSB709-RT1	
Q1912	8-729-120-28	TRANSISTOR 2SC1623-L5L6	
Q1913	8-729-026-49	TRANSISTOR 2SA1037AK-T146-R	
Q2001	8-729-010-05	TRANSISTOR MSB709-RT1	
Q2002	8-729-010-29	TRANSISTOR MSD601-RST1	
Q2003	8-729-028-28	TRANSISTOR 2SK2036(TE85L)	
Q2401	8-729-010-29	TRANSISTOR MSD601-RST1	
Q2500	8-729-010-29	TRANSISTOR MSD601-RST1	
Q2501	8-729-010-29	TRANSISTOR MSD601-RST1	
Q2502	8-729-010-29	TRANSISTOR MSD601-RST1	
Q2503	8-729-010-29	TRANSISTOR MSD601-RST1	
Q2504	8-729-027-38	TRANSISTOR DTA144EKA-T146	
Q6201	8-729-900-53	TRANSISTOR DTC114EK	
Q6202	8-729-900-53	TRANSISTOR DTC114EK	
Q6203	8-729-900-53	TRANSISTOR DTC114EK	
Q6204	8-729-010-05	TRANSISTOR MSB709-RT1	
Q6205	8-729-900-53	TRANSISTOR DTC114EK	
Q6206	8-729-010-29	TRANSISTOR MSD601-RST1	
Q6207	8-729-010-29	TRANSISTOR MSD601-RST1	
Q6208	8-729-010-29	TRANSISTOR MSD601-RST1	
Q6209	8-729-120-28	TRANSISTOR 2SC1623-L5L6	
Q8001	8-729-010-29	TRANSISTOR MSD601-RST1	
Q8309	8-729-120-28	TRANSISTOR 2SC1623-L5L6	
Q8311	8-729-120-28	TRANSISTOR 2SC1623-L5L6	
Q8481	8-729-010-05	TRANSISTOR MSB709-RT1	
		< RESISTOR >	
JR8003	1-216-864-11	SHORT CHIP 0	
R0002	1-216-864-11	SHORT CHIP 0	
R0200	1-216-829-11	METAL CHIP 4.7K 5%	1/10W
R0201	1-216-829-11	METAL CHIP 4.7K 5%	1/10W
R0202	1-216-825-11	METAL CHIP 2.2K 5%	1/10W
R0204	1-216-833-11	METAL CHIP 10K 5%	1/10W
R0205	1-216-825-11	METAL CHIP 2.2K 5%	1/10W
R0207	1-216-833-11	METAL CHIP 10K 5%	1/10W
R1008	1-216-864-11	SHORT CHIP 0	
R1101	1-412-987-31	INDUCTOR 4.7UH	
R1102	1-414-760-21	FERRITE 0UH	
R1103	1-414-760-21	FERRITE 0UH	
R1105	1-414-580-21	INDUCTOR 100NH	
R1106	1-414-580-21	INDUCTOR 100NH	
R1108	1-414-580-21	INDUCTOR 100NH	
R1109	1-414-580-21	INDUCTOR 100NH	
R1201	1-216-864-11	SHORT CHIP 0	

REF.NO.	PART.NO	DESCRIPTION			REMARK
R1300	1-216-821-11	METAL CHIP	1K	5%	1/10W
R1303	1-216-805-11	METAL CHIP	47	5%	1/10W
R1304	1-216-821-11	METAL CHIP	1K	5%	1/10W
R1956	1-216-833-11	METAL CHIP	10K	5%	1/10W
R1957	1-216-825-11	METAL CHIP	2.2K	5%	1/10W
R1958	1-216-825-11	METAL CHIP	2.2K	5%	1/10W
R1959	1-216-825-11	METAL CHIP	2.2K	5%	1/10W
R1960	1-216-825-11	METAL CHIP	2.2K	5%	1/10W
R1962	1-216-833-11	METAL CHIP	10K	5%	1/10W
R2000	1-216-864-11	SHORT CHIP	0		
R2001	1-216-864-11	SHORT CHIP	0		
R2002	1-216-833-11	METAL CHIP	10K	5%	1/10W
R2003	1-216-864-11	SHORT CHIP	0		
R2004	1-216-864-11	SHORT CHIP	0		
R2005	1-216-829-11	METAL CHIP	4.7K	5%	1/10W
R2006	1-216-829-11	METAL CHIP	4.7K	5%	1/10W
R2007	1-216-829-11	METAL CHIP	4.7K	5%	1/10W
R2008	1-216-829-11	METAL CHIP	4.7K	5%	1/10W
R2009	1-216-841-11	METAL CHIP	47K	5%	1/10W
R2010	1-216-864-11	SHORT CHIP	0		
R2011	1-216-864-11	SHORT CHIP	0		
R2012	1-216-864-11	SHORT CHIP	0		
R2013	1-216-864-11	SHORT CHIP	0		
R2014	1-216-864-11	SHORT CHIP	0		
R2015	1-216-864-11	SHORT CHIP	0		
R2016	1-216-864-11	SHORT CHIP	0		
R2017	1-216-809-11	METAL CHIP	100	5%	1/10W
R2018	1-216-809-11	METAL CHIP	100	5%	1/10W
R2019	1-216-825-11	METAL CHIP	2.2K	5%	1/10W
R2021	1-216-833-11	METAL CHIP	10K	5%	1/10W
R2022	1-216-845-11	METAL CHIP	100K	5%	1/10W
R2023	1-216-833-11	METAL CHIP	10K	5%	1/10W
R2024	1-216-841-11	METAL CHIP	47K	5%	1/10W
R2025	1-216-841-11	METAL CHIP	47K	5%	1/10W
R2026	1-216-809-11	METAL CHIP	100	5%	1/10W
R2029	1-216-864-11	SHORT CHIP	0		
R2030	1-216-864-11	SHORT CHIP	0		
R2400	1-218-863-11	METAL CHIP	4.7K	0.5%	1/10W
R2401	1-216-817-11	METAL CHIP	470	5%	1/10W
R2402	1-218-827-11	METAL CHIP	150	0.5%	1/10W
R2403	1-216-833-11	METAL CHIP	10K	5%	1/10W
R2404	1-218-867-11	METAL CHIP	6.8K	0.5%	1/10W
R2405	1-216-838-11	METAL CHIP	27K	5%	1/10W
R2406	1-216-841-11	METAL CHIP	47K	5%	1/10W
R2407	1-216-833-11	METAL CHIP	10K	5%	1/10W
R2408	1-218-895-11	METAL CHIP	100K	0.5%	1/10W
R2500	1-216-841-11	METAL CHIP	47K	5%	1/10W
R2501	1-216-821-11	METAL CHIP	1K	5%	1/10W
R2502	1-216-818-11	METAL CHIP	560	5%	1/10W
R2503	1-216-818-11	METAL CHIP	560	5%	1/10W

REF.NO.	PART.NO	DESCRIPTION			REMARK
R2504	1-216-841-11	METAL CHIP	47K	5%	1/10W
R2505	1-216-821-11	METAL CHIP	1K	5%	1/10W
R2506	1-216-836-11	METAL CHIP	18K	5%	1/10W
R2507	1-216-836-11	METAL CHIP	18K	5%	1/10W
R2508	1-216-841-11	METAL CHIP	47K	5%	1/10W
R2509	1-216-831-91	RES CHIP	68K	5%	1/10W
R2511	1-216-837-11	METAL CHIP	22K	5%	1/10W
R2512	1-216-835-11	METAL CHIP	15K	5%	1/10W
R2513	1-216-825-11	METAL CHIP	2.2K	5%	1/10W
R2516	1-216-845-11	METAL CHIP	100K	5%	1/10W
R2519	1-216-845-11	METAL CHIP	100K	5%	1/10W
R2520	1-216-845-11	METAL CHIP	100K	5%	1/10W
R2521	1-243-826-21	METAL OXIDE	4.7	5%	1W
R2522	1-243-826-21	METAL OXIDE	4.7	5%	1W
R2523	1-216-841-11	METAL CHIP	47K	5%	1/10W
R2524	1-216-864-11	SHORT CHIP	0		
R2525	1-216-821-11	METAL CHIP	1K	5%	1/10W
R6200	1-218-831-11	METAL CHIP	220	0.5%	1/10W
R6201	1-218-839-11	METAL CHIP	470	0.5%	1/10W
R6202	1-216-864-11	SHORT CHIP	0		
R6203	1-216-864-11	SHORT CHIP	0		
R6204	1-218-831-11	METAL CHIP	220	0.5%	1/10W
R6207	1-218-847-11	METAL CHIP	1K	0.5%	1/10W
R6208	1-216-864-11	SHORT CHIP	0		
R6209	1-216-864-11	SHORT CHIP	0		
R6211	1-218-839-11	METAL CHIP	470	0.5%	1/10W
R6212	1-218-839-11	METAL CHIP	470	0.5%	1/10W
R6214	1-216-846-11	METAL CHIP	120K	5%	1/10W
R6215	1-216-844-11	METAL CHIP	82K	5%	1/10W
R6217	1-216-841-11	METAL CHIP	47K	5%	1/10W
R6218	1-216-833-11	METAL CHIP	10K	5%	1/10W
R6221	1-216-834-91	RES CHIP	12K	5%	1/10W
R6223	1-216-841-11	METAL CHIP	47K	5%	1/10W
R6224	1-218-867-11	METAL CHIP	6.8K	0.5%	1/10W
R6226	1-218-832-91	RES CHIP	8.2K	5%	1/10W
R6228	1-216-812-11	METAL CHIP	180	5%	1/10W
R6229	1-216-829-11	METAL CHIP	4.7K	5%	1/10W
R6230	1-216-846-11	METAL CHIP	120K	5%	1/10W
R6231	1-216-834-11	METAL CHIP	12K	5%	1/10W
R6232	1-216-849-11	METAL CHIP	220K	5%	1/10W
R6233	1-216-836-11	METAL CHIP	18K	5%	1/10W
R6234	1-216-833-11	METAL CHIP	10K	5%	1/10W
R6235	1-216-839-11	METAL CHIP	33K	5%	1/10W
R6236	1-216-833-11	METAL CHIP	10K	5%	1/10W
R6237	1-216-833-11	METAL CHIP	10K	5%	1/10W
R6238	1-216-809-11	METAL CHIP	100	5%	1/10W
R6239	1-216-821-11	METAL CHIP	1K	5%	1/10W
R6240	1-216-809-11	METAL CHIP	100	5%	1/10W
R6241	1-216-821-11	METAL CHIP	1K	5%	1/10W
R6242	1-216-821-11	METAL CHIP	1K	5%	1/10W

REF.NO.	PART.NO	DESCRIPTION			REMARK
R6244	1-216-841-11	METAL CHIP	47K	5%	1/10W
R6245	1-216-864-11	SHORT CHIP	0		
R6246	1-216-864-11	SHORT CHIP	0		
R6247	1-216-864-11	SHORT CHIP	0		
R6251	1-216-809-11	METAL CHIP	100	5%	1/10W
R6252	1-216-841-11	METAL CHIP	47K	5%	1/10W
R6253	1-216-841-11	METAL CHIP	47K	5%	1/10W
R6254	1-216-829-11	METAL CHIP	4.7K	5%	1/10W
R6256	1-216-841-11	METAL CHIP	47K	5%	1/10W
R6257	1-216-829-11	METAL CHIP	4.7K	5%	1/10W
R6258	1-216-829-11	METAL CHIP	4.7K	5%	1/10W
R6259	1-216-829-11	METAL CHIP	4.7K	5%	1/10W
R6260	1-216-829-11	METAL CHIP	4.7K	5%	1/10W
R6261	1-216-821-11	METAL CHIP	1K	5%	1/10W
R6262	1-216-834-11	METAL CHIP	12K	5%	1/10W
R6263	1-216-833-11	METAL CHIP	10K	5%	1/10W
R6264	1-216-833-11	METAL CHIP	10K	5%	1/10W
R6266	1-216-833-11	METAL CHIP	10K	5%	1/10W
R6267	1-216-833-11	METAL CHIP	10K	5%	1/10W
R8000	1-216-841-11	METAL CHIP	47K	5%	1/10W
R8001	1-216-864-11	SHORT CHIP	0		
R8002	1-216-809-11	METAL CHIP	100	5%	1/10W
R8003	1-216-809-11	METAL CHIP	100	5%	1/10W
R8004	1-216-809-11	METAL CHIP	100	5%	1/10W
R8005	1-216-809-11	METAL CHIP	100	5%	1/10W
R8006	1-216-809-11	METAL CHIP	100	5%	1/10W
R8007	1-216-809-11	METAL CHIP	100	5%	1/10W
R8008	1-216-809-11	METAL CHIP	100	5%	1/10W
R8009	1-216-809-11	METAL CHIP	100	5%	1/10W
R8010	1-216-809-11	METAL CHIP	100	5%	1/10W
R8011	1-216-809-11	METAL CHIP	100	5%	1/10W
R8012	1-216-809-11	METAL CHIP	100	5%	1/10W
R8013	1-216-809-11	METAL CHIP	100	5%	1/10W
R8014	1-216-809-11	METAL CHIP	100	5%	1/10W
R8015	1-216-809-11	METAL CHIP	100	5%	1/10W
R8016	1-216-809-11	METAL CHIP	100	5%	1/10W
R8017	1-216-809-11	METAL CHIP	100	5%	1/10W
R8018	1-216-864-11	SHORT CHIP	0		
R8019	1-216-864-11	SHORT CHIP	0		
R8020	1-216-864-11	SHORT CHIP	0		
R8021	1-216-864-11	SHORT CHIP	0		
R8025	1-216-821-11	METAL CHIP	1K	5%	1/10W
R8026	1-216-837-11	METAL CHIP	22K	5%	1/10W
R8201	1-216-864-11	SHORT CHIP	0		
R8430	1-216-841-11	METAL CHIP	47K	5%	1/10W
R8431	1-216-841-11	METAL CHIP	47K	5%	1/10W
R8432	1-216-837-11	METAL CHIP	22K	5%	1/10W
R8433	1-216-837-11	METAL CHIP	22K	5%	1/10W
R8434	1-216-825-11	METAL CHIP	2.2K	5%	1/10W
R8435	1-216-825-11	METAL CHIP	2.2K	5%	1/10W
R8436	1-216-793-11	METAL CHIP	4.7	5%	1/10W
R8437	1-216-793-11	METAL CHIP	4.7	5%	1/10W
R8438	1-216-813-11	METAL CHIP	220	5%	1/10W
R8439	1-216-813-11	METAL CHIP	220	5%	1/10W
R8481	1-216-821-11	METAL CHIP	1K	5%	1/10W
R8482	1-216-811-11	METAL CHIP	150	5%	1/10W
R8483	1-216-811-11	METAL CHIP	150	5%	1/10W
R8484	1-216-811-11	METAL CHIP	150	5%	1/10W
R8485	1-216-811-11	METAL CHIP	150	5%	1/10W
R8487	1-216-821-11	METAL CHIP	1K	5%	1/10W
		< TUNER >			
TU1100	8-598-535-20	FRONTEND BTF-EF411			
		< CRYSTAL >			
X2000	1-760-628-11	VIBRATOR, CRYSTAL			

*** A-1405-804-A J Board, Complete**

		< CAPACITOR >			
C2804	1-164-227-11	CERAMIC CHIP	0.022UF	10.00%	25V
C2805	1-162-964-11	CERAMIC CHIP	0.001UF	10.00%	50V
C2806	1-164-227-11	CERAMIC CHIP	0.022UF	10.00%	25V
C2807	1-162-964-11	CERAMIC CHIP	0.001UF	10.00%	50V
C2808	1-165-908-11	CERAMIC CHIP	1UF	10%	10V
C2809	1-165-908-11	CERAMIC CHIP	1UF	10%	10V
C2810	1-126-947-11	ELECT	47UF	20.00%	35V
C2811	1-126-947-11	ELECT	47UF	20.00%	35V
C2812	1-125-837-91	CERAMIC CHIP	1UF	10%	6.3V
C2813	1-125-837-91	CERAMIC CHIP	1UF	10%	6.3V
C2814	1-164-156-11	CERAMIC CHIP	0.1UF		25V
C2815	1-164-156-11	CERAMIC CHIP	0.1UF		25V
C2821	1-162-964-11	CERAMIC CHIP	0.001UF	10.00%	50V
C2823	1-162-964-11	CERAMIC CHIP	0.001UF	10.00%	50V
C2824	1-165-908-11	CERAMIC CHIP	1UF	10%	10V
C2825	1-165-908-11	CERAMIC CHIP	1UF	10%	10V
C2826	1-126-947-11	ELECT	47UF	20.00%	35V
C2827	1-126-947-11	ELECT	47UF	20.00%	35V
C2832	1-164-227-11	CERAMIC CHIP	0.022UF	10.00%	25V
C2833	1-162-964-11	CERAMIC CHIP	0.001UF	10.00%	50V
C2834	1-164-227-11	CERAMIC CHIP	0.022UF	10.00%	25V
C2835	1-162-964-11	CERAMIC CHIP	0.001UF	10.00%	50V
C2836	1-165-908-11	CERAMIC CHIP	1UF	10%	10V
C2837	1-165-908-11	CERAMIC CHIP	1UF	10%	10V
C2838	1-126-947-11	ELECT	47UF	20.00%	35V
C2839	1-126-947-11	ELECT	47UF	20.00%	35V
C2855	1-165-908-11	CERAMIC CHIP	1UF	10%	10V
C2856	1-165-908-11	CERAMIC CHIP	1UF	10%	10V
C2857	1-162-923-11	CERAMIC CHIP	47PF	5.00%	50V
C2858	1-164-156-11	CERAMIC CHIP	0.1UF		25V

REF.NO.	PART.NO	DESCRIPTION	REMARK
C2859	1-126-964-11	ELECT 10UF	20.00% 50V
C2860	1-126-947-11	ELECT 47UF	20.00% 35V
C3808	1-107-826-11	CERAMIC CHIP 0.1UF	10.00% 16V
C3809	1-107-826-11	CERAMIC CHIP 0.1UF	10.00% 16V
C3810	1-126-947-11	ELECT 47UF	20.00% 35V
C3816	1-164-156-11	CERAMIC CHIP 0.1UF	25V
C3817	1-107-826-11	CERAMIC CHIP 0.1UF	10.00% 16V
C3818	1-107-826-11	CERAMIC CHIP 0.1UF	10.00% 16V
C3819	1-107-826-11	CERAMIC CHIP 0.1UF	10.00% 16V
C3820	1-107-826-11	CERAMIC CHIP 0.1UF	10.00% 16V
C3821	1-164-156-11	CERAMIC CHIP 0.1UF	25V
C3822	1-164-156-11	CERAMIC CHIP 0.1UF	25V
C3824	1-164-156-11	CERAMIC CHIP 0.1UF	25V
C3825	1-107-826-11	CERAMIC CHIP 0.1UF	10.00% 16V
C3826	1-164-156-11	CERAMIC CHIP 0.1UF	25V
C3827	1-126-964-11	ELECT 10UF	20.00% 50V
C3832	1-164-156-11	CERAMIC CHIP 0.1UF	25V
C3834	1-164-156-11	CERAMIC CHIP 0.1UF	25V
C3836	1-126-947-11	ELECT 47UF	20.00% 35V
C3841	1-164-156-11	CERAMIC CHIP 0.1UF	25V
C3842	1-164-156-11	CERAMIC CHIP 0.1UF	25V
C3843	1-164-156-11	CERAMIC CHIP 0.1UF	25V
C3844	1-164-156-11	CERAMIC CHIP 0.1UF	25V
C3845	1-126-947-11	ELECT 47UF	20.00% 35V
C3846	1-126-947-11	ELECT 47UF	20.00% 35V
C3847	1-126-947-11	ELECT 47UF	20.00% 35V
C3848	1-126-947-11	ELECT 47UF	20.00% 35V
C3849	1-107-826-11	CERAMIC CHIP 0.1UF	10.00% 16V
C3857	1-107-826-11	CERAMIC CHIP 0.1UF	10.00% 16V
C3858	1-107-826-11	CERAMIC CHIP 0.1UF	10.00% 16V
C3860	1-107-826-11	CERAMIC CHIP 0.1UF	10.00% 16V
C3861	1-107-826-11	CERAMIC CHIP 0.1UF	10.00% 16V
C3863	1-162-919-11	CERAMIC CHIP 22PF	5.00% 50V
C3864	1-165-908-11	CERAMIC CHIP 1UF	10% 10V
C3865	1-165-908-11	CERAMIC CHIP 1UF	10% 10V
C3866	1-162-927-11	CERAMIC CHIP 100PF	5.00% 50V
C3867	1-162-927-11	CERAMIC CHIP 100PF	5.00% 50V
C3868	1-162-927-11	CERAMIC CHIP 100PF	5.00% 50V
		< CONNECTOR >	
CN3800	* 1-564-527-11	PLUG, CONNECTOR 12P	
CN3801	1-695-549-11	SOCKET, PIN 21P	
CN3802	1-695-549-11	SOCKET, PIN 21P	
CN3803	1-695-549-11	SOCKET, PIN 21P	
CN3804	1-817-114-11	CONNECTOR, BOARD TO BOARD 35P	
CN3805	* 1-564-525-11	PLUG, CONNECTOR 10P	
CN3806	* 1-564-523-11	PLUG, CONNECTOR 8P	
CN3807	* 1-564-521-11	PLUG, CONNECTOR 6P	
CN3808	* 1-817-804-11	CONNECTOR, D SUB 15P	
CN3809	* 1-564-525-11	PLUG, CONNECTOR 10P	

REF.NO.	PART.NO	DESCRIPTION	REMARK
		< DIODE >	
D800	8-719-069-55	DIODE UDZSTE-175.6B	
D2800	1-803-974-21	VARISTOR CHIP	
D2801	8-719-069-60	DIODE UDZSTE-179.1B	
D2802	1-803-974-21	VARISTOR CHIP	
D2803	8-719-069-60	DIODE UDZSTE-179.1B	
D2804	1-803-974-21	VARISTOR CHIP	
D2805	8-719-069-60	DIODE UDZSTE-179.1B	
D2806	1-803-974-21	VARISTOR CHIP	
D2807	8-719-069-60	DIODE UDZSTE-179.1B	
D2808	1-803-974-21	VARISTOR CHIP	
D2809	8-719-069-60	DIODE UDZSTE-179.1B	
D2810	1-803-974-21	VARISTOR CHIP	
D2811	8-719-069-60	DIODE UDZSTE-179.1B	
D2812	8-719-069-60	DIODE UDZSTE-179.1B	
D2813	8-719-069-60	DIODE UDZSTE-179.1B	
D2830	8-719-069-60	DIODE UDZSTE-179.1B	
D2831	8-719-069-60	DIODE UDZSTE-179.1B	
D2832	8-719-069-60	DIODE UDZSTE-179.1B	
D2833	8-719-069-60	DIODE UDZSTE-179.1B	
D2834	8-719-069-60	DIODE UDZSTE-179.1B	
D2835	8-719-069-60	DIODE UDZSTE-179.1B	
D3800	8-719-083-63	DIODE UDZSTE-1713B	
D3801	8-719-069-55	DIODE UDZSTE-175.6B	
D3802	8-719-069-55	DIODE UDZSTE-175.6B	
D3803	8-719-069-55	DIODE UDZSTE-175.6B	
D3804	8-719-069-55	DIODE UDZSTE-175.6B	
D3805	8-719-069-55	DIODE UDZSTE-175.6B	
D3806	8-719-069-55	DIODE UDZSTE-175.6B	
D3807	8-719-069-55	DIODE UDZSTE-175.6B	
D3808	8-719-083-63	DIODE UDZSTE-1713B	
D3809	8-719-069-55	DIODE UDZSTE-175.6B	
D3810	8-719-069-55	DIODE UDZSTE-175.6B	
D3811	8-719-069-55	DIODE UDZSTE-175.6B	
D3812	8-719-069-55	DIODE UDZSTE-175.6B	
D3813	8-719-069-55	DIODE UDZSTE-175.6B	
D3814	8-719-083-63	DIODE UDZSTE-1713B	
D3815	8-719-069-55	DIODE UDZSTE-175.6B	
D3816	8-719-069-55	DIODE UDZSTE-175.6B	
D3817	8-719-069-55	DIODE UDZSTE-175.6B	
D3818	8-719-069-55	DIODE UDZSTE-175.6B	
D3819	8-719-069-55	DIODE UDZSTE-175.6B	
D3820	8-719-069-60	DIODE UDZSTE-179.1B	
D3821	8-719-069-60	DIODE UDZSTE-179.1B	
D3822	8-719-069-55	DIODE UDZSTE-175.6B	
D3823	8-719-069-55	DIODE UDZSTE-175.6B	
D3824	8-719-069-55	DIODE UDZSTE-175.6B	
D3825	8-719-069-55	DIODE UDZSTE-175.6B	
D3826	8-719-069-55	DIODE UDZSTE-175.6B	

REF.NO.	PART.NO	DESCRIPTION	REMARK
D3827	8-719-069-55	DIODE UDZSTE-175.6B	
D3828	8-719-069-55	DIODE UDZSTE-175.6B	
D3829	8-719-069-55	DIODE UDZSTE-175.6B	
		< FERRITE BEAD >	
FB001	1-414-813-11	FERRITE 0UH	
FB3800	1-414-760-21	FERRITE 0UH	
		< IC >	
IC3800	8-752-096-83	IC CXA2149AQ-TL	
IC3801	8-759-661-55	IC ST24FC21M6TR	
		< SOCKET >	
J2800	1-507-792-00	JACK	
		< COIL >	
L2802	1-414-928-21	INDUCTOR 1UH	
L3811	1-414-928-21	INDUCTOR 1UH	
L3812	1-414-928-21	INDUCTOR 1UH	
L3814	1-414-928-21	INDUCTOR 1UH	
L3816	1-412-975-31	INDUCTOR 0.47UH	
		< TRANSISTOR >	
Q2802	8-729-010-29	TRANSISTOR MSD601-RST1	
Q2803	8-729-010-29	TRANSISTOR MSD601-RST1	
Q2804	8-729-010-29	TRANSISTOR MSD601-RST1	
Q3856	8-729-010-29	TRANSISTOR MSD601-RST1	
Q3857	8-729-010-29	TRANSISTOR MSD601-RST1	
Q3858	8-729-010-29	TRANSISTOR MSD601-RST1	
Q3859	8-729-010-05	TRANSISTOR MSB709-RT1	
Q3860	8-729-010-05	TRANSISTOR MSB709-RT1	
Q3861	8-729-010-05	TRANSISTOR MSB709-RT1	
Q3862	8-729-010-05	TRANSISTOR MSB709-RT1	
Q3863	8-729-010-29	TRANSISTOR MSD601-RST1	
		< RESISTOR >	
JR2817	1-216-295-91	SHORT CHIP 0	
JR2818	1-216-295-91	SHORT CHIP 0	
JR3808	1-216-295-91	SHORT CHIP 0	
JR3809	1-216-295-91	SHORT CHIP 0	
JR3810	1-216-295-91	SHORT CHIP 0	
R802	1-216-025-11	RES-CHIP 100 5%	1/10W
R0800	1-216-809-11	METAL CHIP 100 5%	1/10W
R0801	1-216-809-11	METAL CHIP 100 5%	1/10W
R2800	1-216-815-11	METAL CHIP 330 5%	1/10W
R2801	1-216-049-11	RES-CHIP 1K 5%	1/10W
R2802	1-216-815-11	METAL CHIP 330 5%	1/10W
R2803	1-216-049-11	RES-CHIP 1K 5%	1/10W
R2804	1-216-813-11	METAL CHIP 220 5%	1/10W

REF.NO.	PART.NO	DESCRIPTION	REMARK
R2806	1-216-813-11	METAL CHIP 220 5%	1/10W
R2808	1-216-853-11	METAL CHIP 470K 5%	1/10W
R2809	1-216-853-11	METAL CHIP 470K 5%	1/10W
R2810	1-216-853-11	METAL CHIP 470K 5%	1/10W
R2811	1-216-853-11	METAL CHIP 470K 5%	1/10W
R2812	1-216-813-11	METAL CHIP 220 5%	1/10W
R2813	1-216-813-11	METAL CHIP 220 5%	1/10W
R2817	1-216-821-11	METAL CHIP 1K 5%	1/10W
R2819	1-216-821-11	METAL CHIP 1K 5%	1/10W
R2820	1-216-837-11	METAL CHIP 22K 5%	1/10W
R2821	1-216-837-11	METAL CHIP 22K 5%	1/10W
R2822	1-216-837-11	METAL CHIP 22K 5%	1/10W
R2823	1-216-837-11	METAL CHIP 22K 5%	1/10W
R2824	1-216-815-11	METAL CHIP 330 5%	1/10W
R2825	1-216-049-11	RES-CHIP 1K 5%	1/10W
R2826	1-216-815-11	METAL CHIP 330 5%	1/10W
R2827	1-216-049-11	RES-CHIP 1K 5%	1/10W
R2828	1-216-813-91	RES CHIP 220 5%	1/10W
R2830	1-216-813-91	RES CHIP 220 5%	1/10W
R2832	1-216-853-11	METAL CHIP 470K 5%	1/10W
R2833	1-216-853-11	METAL CHIP 470K 5%	1/10W
R2834	1-216-853-11	METAL CHIP 470K 5%	1/10W
R2835	1-216-853-11	METAL CHIP 470K 5%	1/10W
R2836	1-216-815-11	METAL CHIP 330 5%	1/10W
R2837	1-216-049-11	RES-CHIP 1K 5%	1/10W
R2838	1-216-815-11	METAL CHIP 330 5%	1/10W
R2839	1-216-049-11	RES-CHIP 1K 5%	1/10W
R2840	1-216-813-11	METAL CHIP 220 5%	1/10W
R2842	1-216-813-11	METAL CHIP 220 5%	1/10W
R2844	1-216-853-11	METAL CHIP 470K 5%	1/10W
R2845	1-216-853-11	METAL CHIP 470K 5%	1/10W
R2846	1-216-853-11	METAL CHIP 470K 5%	1/10W
R2847	1-216-853-11	METAL CHIP 470K 5%	1/10W
R2848	1-216-821-11	METAL CHIP 1K 5%	1/10W
R2850	1-216-833-11	METAL CHIP 10K 5%	1/10W
R2851	1-216-864-11	SHORT CHIP 0	
R2852	1-216-864-11	SHORT CHIP 0	
R2853	1-216-864-11	SHORT CHIP 0	
R2854	1-216-864-11	SHORT CHIP 0	
R2855	1-216-864-11	SHORT CHIP 0	
R2856	1-216-864-11	SHORT CHIP 0	
R2877	1-216-864-11	SHORT CHIP 0	
R2878	1-216-864-11	SHORT CHIP 0	
R2879	1-216-864-11	SHORT CHIP 0	
R2880	1-216-864-11	SHORT CHIP 0	
R2881	1-216-864-11	SHORT CHIP 0	
R2882	1-216-864-11	SHORT CHIP 0	
R3800	1-216-022-00	RES-CHIP 75 5%	1/10W
R3801	1-216-022-00	RES-CHIP 75 5%	1/10W
R3802	1-216-022-00	RES-CHIP 75 5%	1/10W

Note : The components identified by shading and marked ⚠ are critical for safety. Replace only with the part numbers specified in the parts list.

REF.NO.	PART.NO	DESCRIPTION			REMARK
R3803	1-216-022-00	RES-CHIP	75	5%	1/10W
R3804	1-216-022-00	RES-CHIP	75	5%	1/10W
R3805	1-216-809-11	METAL CHIP	100	5%	1/10W
R3807	1-216-809-11	METAL CHIP	100	5%	1/10W
R3808	1-216-809-11	METAL CHIP	100	5%	1/10W
R3809	1-216-809-11	METAL CHIP	100	5%	1/10W
R3810	1-216-809-11	METAL CHIP	100	5%	1/10W
R3811	1-216-022-00	RES-CHIP	75	5%	1/10W
R3812	1-216-809-11	METAL CHIP	100	5%	1/10W
R3813	1-216-022-00	RES-CHIP	75	5%	1/10W
R3814	1-216-809-11	METAL CHIP	100	5%	1/10W
R3815	1-216-022-00	RES-CHIP	75	5%	1/10W
R3816	1-216-022-00	RES-CHIP	75	5%	1/10W
R3817	1-216-022-00	RES-CHIP	75	5%	1/10W
R3818	1-216-022-00	RES-CHIP	75	5%	1/10W
R3819	1-216-809-11	METAL CHIP	100	5%	1/10W
R3821	1-216-809-11	METAL CHIP	100	5%	1/10W
R3822	1-216-809-11	METAL CHIP	100	5%	1/10W
R3823	1-216-809-11	METAL CHIP	100	5%	1/10W
R3824	1-216-022-00	RES-CHIP	75	5%	1/10W
R3825	1-216-809-11	METAL CHIP	100	5%	1/10W
R3826	1-216-022-00	RES-CHIP	75	5%	1/10W
R3827	1-216-022-00	RES-CHIP	75	5%	1/10W
R3828	1-216-022-00	RES-CHIP	75	5%	1/10W
R3829	1-216-022-00	RES-CHIP	75	5%	1/10W
R3830	1-216-809-11	METAL CHIP	100	5%	1/10W
R3831	1-216-809-11	METAL CHIP	100	5%	1/10W
R3832	1-216-809-11	METAL CHIP	100	5%	1/10W
R3834	1-216-022-00	RES-CHIP	75	5%	1/10W
R3835	1-216-809-11	METAL CHIP	100	5%	1/10W
R3836	1-216-809-11	METAL CHIP	100	5%	1/10W
R3838	1-216-864-11	SHORT CHIP	0		
R3839	1-216-843-11	METAL CHIP	68K	5%	1/10W
R3841	1-216-843-11	METAL CHIP	68K	5%	1/10W
R3843	1-218-885-11	METAL CHIP	39K	0.5%	1/10W
R3847	1-216-864-11	SHORT CHIP	0		
R3852	1-216-825-11	METAL CHIP	2.2K	5%	1/10W
R3856	1-216-825-11	METAL CHIP	2.2K	5%	1/10W
R3859	1-216-825-11	METAL CHIP	2.2K	5%	1/10W
R3861	1-216-864-11	SHORT CHIP	0		
R3862	1-216-841-11	METAL CHIP	47K	5%	1/10W
R3863	1-216-841-11	METAL CHIP	47K	5%	1/10W
R3864	1-216-841-11	METAL CHIP	47K	5%	1/10W
R3865	1-216-837-11	METAL CHIP	22K	5%	1/10W
R3866	1-216-837-11	METAL CHIP	22K	5%	1/10W
R3867	1-216-837-11	METAL CHIP	22K	5%	1/10W
R3868	1-216-835-11	METAL CHIP	15K	5%	1/10W
R3869	1-216-835-11	METAL CHIP	15K	5%	1/10W
R3870	1-216-845-11	METAL CHIP	100K	5%	1/10W
R3871	1-216-805-11	METAL CHIP	47	5%	1/10W
R3872	1-216-813-11	METAL CHIP	220	5%	1/10W
R3873	1-216-821-11	METAL CHIP	1K	5%	1/10W
R3874	1-216-864-11	SHORT CHIP	0		
R3875	1-216-805-11	METAL CHIP	47	5%	1/10W
R3876	1-216-805-11	METAL CHIP	47	5%	1/10W
R3877	1-216-812-11	METAL CHIP	180	5%	1/10W
R3879	1-216-807-11	METAL CHIP	68	5%	1/10W
R3880	1-216-808-11	METAL CHIP	82	5%	1/10W
R3881	1-216-812-11	METAL CHIP	180	5%	1/10W
R3883	1-216-807-11	METAL CHIP	68	5%	1/10W
R3884	1-216-808-11	METAL CHIP	82	5%	1/10W
R3885	1-216-812-11	METAL CHIP	180	5%	1/10W
R3887	1-216-807-11	METAL CHIP	68	5%	1/10W
R3888	1-216-808-11	METAL CHIP	82	5%	1/10W
R3889	1-216-864-11	SHORT CHIP	0		
R3890	1-216-864-11	SHORT CHIP	0		
R3893	1-218-839-11	METAL CHIP	470	0.5%	1/10W
R3894	1-216-864-11	SHORT CHIP	0		
R3895	1-216-827-11	METAL CHIP	3.3K	5%	1/10W
R3896	1-216-827-11	METAL CHIP	3.3K	5%	1/10W

< VARISTOR >

VD2800	1-803-974-21	VARISTOR, CHIP	(1608)
VD2801	1-803-974-21	VARISTOR, CHIP	(1608)

* A-1405-811-A T Board, Complete

< CONNECTOR >

CN1000	* 1-564-518-11	PLUG, CONNECTOR 3P	

< SWITCH >

S1000	1-570-245-11	SWITCH, MICRO	

* A-1302-408-A G Board, Complete

	4-382-854-01	SCREW (M3X8), P, SW (+)	

< CAPACITOR >

C1602		1-163-005-91	CERAMIC CHIP	470PF	10.00% 50V
C1603		1-107-678-11	ELECT	4.7UF	20.00% 450V
C1604	⚠	1-161-830-00	CERAMIC	0.0047UF	99% 500V
C1605	⚠	1-161-830-00	CERAMIC	0.0047UF	99% 500V
C1606		1-163-809-11	CERAMIC CHIP	0.047UF	10.00% 25V
C1607	⚠	1-161-830-00	CERAMIC	0.0047UF	99% 500V
C1608	⚠	1-161-830-00	CERAMIC	0.0047UF	99% 500V
C1609		1-163-021-91	CERAMIC CHIP	0.01UF	10.00% 50V
C1610		1-163-009-91	CERAMIC CHIP	0.001UF	10.00% 50V
C1612		1-117-753-11	ELECT(BLOCK)	470UF	20.00% 450V
C1613		1-126-964-11	ELECT	10UF	20.00% 50V
C1614		1-126-967-11	ELECT	47UF	20.00% 50V

Note : The components identified by shading and marked ⚠ are critical for safety. Replace only with the part numbers specified in the parts list.

G

REF.NO.		PART.NO	DESCRIPTION		REMARK
C1615		1-126-948-11	ELECT	100UF	20.00% 35V
C1616		1-137-605-11	MYLAR	0.01UF	10.00% 250V
C1617		1-126-965-91	ELECT	22UF	20.00% 50V
C1618		1-136-165-00	FILM	0.1UF	5.00% 50V
C1620		1-126-960-11	ELECT	1UF	20.00% 50V
C1621		1-126-940-11	ELECT	330UF	20.00% 25V
C1622		1-126-961-11	ELECT	2.2UF	20.00% 50V
C1623		1-136-479-11	FILM	0.001UF	5.00% 100V
C1624		1-126-962-11	ELECT	3.3UF	20.00% 50V
C1625		1-164-004-11	CERAMIC CHIP	0.1UF	10.00% 25V
C1626		1-113-924-11	CERAMIC	0.0047UF	20.00% 250V
C1627		1-125-969-91	CERAMIC	680PF	10.00% 1KV
C1628		1-125-969-91	CERAMIC	680PF	10.00% 1KV
C1629		1-135-946-82	FILM	47000PF	3% 800V
C1630		1-126-939-11	ELECT	10000UF	20.00% 16V
C1631		1-126-942-61	ELECT	1000UF	20.00% 25V
C1632		1-126-964-11	ELECT	10UF	20.00% 50V
C1633		1-126-947-11	ELECT	47UF	20.00% 35V
C1634		1-128-548-11	ELECT	4700UF	20.00% 25V
C1635		1-128-548-11	ELECT	4700UF	20.00% 25V
C1636		1-163-021-91	CERAMIC CHIP	0.01UF	10.00% 50V
C1637		1-126-929-11	ELECT	4700UF	20.00% 10V
C1638		1-126-932-51	ELECT	15000UF	20.00% 10V
C1639		1-164-004-11	CERAMIC CHIP	0.1UF	10.00% 25V
C1640		1-126-947-11	ELECT	47UF	20.00% 35V
C1641		1-126-947-11	ELECT	47UF	20.00% 35V
C1642		1-126-964-11	ELECT	10UF	20.00% 50V
C1643		1-126-947-11	ELECT	47UF	20.00% 35V
C1644		1-126-947-11	ELECT	47UF	20.00% 35V
C1645		1-126-947-11	ELECT	47UF	20.00% 35V
C1646		1-163-021-91	CERAMIC CHIP	0.01UF	10.00% 50V
C1647		1-163-021-91	CERAMIC CHIP	0.01UF	10.00% 50V
C1648		1-163-021-91	CERAMIC CHIP	0.01UF	10.00% 50V
C1649		1-163-021-91	CERAMIC CHIP	0.01UF	10.00% 50V
C1650		1-163-021-91	CERAMIC CHIP	0.01UF	10.00% 50V
C1651		1-163-021-91	CERAMIC CHIP	0.01UF	10.00% 50V
C1652		1-126-964-11	ELECT	10UF	20.00% 50V
C1653		1-126-967-11	ELECT	47UF	20.00% 50V
C1654		1-126-947-11	ELECT	47UF	20.00% 35V
C1655		1-163-009-91	CERAMIC CHIP	0.001UF	10.00% 50V
C1656		1-163-009-91	CERAMIC CHIP	0.001UF	10.00% 50V
C1657		1-163-009-91	CERAMIC CHIP	0.001UF	10.00% 50V
C1658		1-163-009-91	CERAMIC CHIP	0.001UF	10.00% 50V
C1659		1-137-194-81	FILM	0.47UF	5.00% 50V
C1660	⚠	1-165-530-11	MYLAR	0.47UF	10 275V
C1661	⚠	1-113-889-11	CERAMIC	0.001UF	20.00% 250V
C1662	⚠	1-113-889-11	CERAMIC	0.001UF	20.00% 250V
C1664	⚠	1-165-530-11	MYLAR	0.47UF	10 275V
C1666		1-109-843-11	CERAMIC	33PF	5.00% 2KV
C1667		1-109-843-11	CERAMIC	33PF	5.00% 2KV
C1668		1-109-843-11	CERAMIC	33PF	5.00% 2KV
C1669		1-109-843-11	CERAMIC	33PF	5.00% 2KV
C1670		1-125-497-11	ELECT(BLOCK)	100UF	20% 400V
C1671		1-125-497-11	ELECT(BLOCK)	100UF	20% 400V
C1672		1-161-830-00	CERAMIC	0.0047UF	500V
C1674		1-164-004-11	CERAMIC CHIP	0.1UF	10.00% 25V
C1675		1-163-021-91	CERAMIC CHIP	0.01UF	10.00% 50V

< CONNECTOR >

CN1601	⚠ *	1-580-843-11	PIN, CONNECTOR (POWER)	
CN1602	*	1-691-960-11	PIN, CONNECTOR (PC BOARD) 3P	
CN1603		1-766-281-11	PIN, CONNECTOR (PC BOARD) 8P	
CN1604	*	1-580-838-11	PIN, CONNECTOR (PC BOARD) 4P	
CN1605	*	1-816-977-51	PLUG, CONNECTOR 6P	
CN1606	*	1-816-978-51	PLUG, CONNECTOR 7P	
CN1607	*	1-564-516-11	PLUG, CONNECTOR 13P	
CN1609		1-695-915-11	TAB (CONTACT)	
CN1610		1-695-915-11	TAB (CONTACT)	
CN1611		1-695-915-11	TAB (CONTACT)	
CN1612		1-695-915-11	TAB (CONTACT)	
CN1613	*	1-564-512-11	PLUG, CONNECTOR 9P	
CN1614	*	1-816-974-51	PLUG, CONNECTOR 3P	
CN1615	*	1-564-507-11	PLUG, CONNECTOR 4P	
CN1616	⚠ *	1-691-960-11	PIN, CONNECTOR (PC BOARD) 3P	

< DIODE >

D1601		8-719-077-76	DIODE D2SB60A-F04
D1602	⚠	8-719-022-99	DIODE D6SB60L
D1603		8-719-106-89	DIODE RD15M-T1B2
D1604		8-719-988-61	DIODE 1SS355TE-17
D1605		8-719-948-45	DIODE ERA22-08
D1606		8-719-105-92	DIODE RD5.6M-B3
D1607		8-719-979-64	DIODE UF4005PKG23
D1608		8-719-060-90	DIODE S2L60F
D1609		6-500-175-01	DIODE 1E3-TB
D1610		8-719-510-48	DIODE D1N20R
D1612		8-719-060-90	DIODE S2L60F
D1613		8-719-510-02	DIODE D1NS4
D1614		8-719-510-02	DIODE D1NS4
D1616		8-719-510-02	DIODE D1NS4
D1617		8-719-510-02	DIODE D1NS4
D1618		8-719-988-61	DIODE 1SS355TE-17
D1619		8-719-105-91	DIODE RD5.6M-B2
D1620		8-719-055-40	DIODE FCQ30A04
D1621		8-719-018-84	DIODE D2S6M
D1623		8-719-055-40	DIODE FCQ30A04
D1624		8-719-510-09	DIODE D10SC6M
D1625		8-719-988-31	DIODE D10SC6MR
D1626		8-719-510-12	DIODE D10SC4M
D1629		8-719-988-61	DIODE 1SS355TE-17

Note : The components identified by shading and marked ⚠ are critical for safety. Replace only with the part numbers specified in the parts list.

G

REF.NO.		PART.NO	DESCRIPTION	REMARK
D1630		8-719-988-61	DIODE 1SS355TE-17	
D1631		8-719-988-61	DIODE 1SS355TE-17	
D1632		1-216-295-91	SHORT CHIP 0	
D1635		8-719-060-90	DIODE S2L60F	
D1636		8-719-060-90	DIODE S2L60F	
D1638		8-719-988-61	DIODE 1SS355TE-17	
D1639		8-719-510-02	DIODE D1NS4	
D1640		8-719-105-91	DIODE RD5.6M-B2	
D1641		8-719-988-61	DIODE 1SS355TE-17	
D1642		8-719-988-61	DIODE 1SS355TE-17	
			< FUSE >	
F1601	⚠	1-576-232-12	FUSE 5A 250V	
FH1601	⚠	1-533-223-11	FUSE HOLDER	
FH1602	⚠	1-533-223-11	FUSE HOLDER	
			< FERRITE BEAD >	
FB1601		1-410-397-21	FERRITE 1.1UH	
FB1602		1-410-397-21	FERRITE 1.1UH	
FB1603		1-410-397-21	FERRITE 1.1UH	
FB1604		1-410-397-21	FERRITE 1.1UH	
FB1605		1-410-397-21	FERRITE 1.1UH	
FB1606		1-410-397-21	FERRITE 1.1UH	
			< IC >	
IC1601		8-759-670-30	IC MCZ3001D	
IC1602		8-759-198-31	IC UPC1093J-1-T	
IC1603		8-759-198-31	IC UPC1093J-1-T	
			< COIL >	
L1601		1-412-525-31	INDUCTOR 10UH	
L1602		1-412-523-41	INDUCTOR 6.8UH	
L1603		1-412-523-41	INDUCTOR 6.8UH	
L1604		1-412-525-31	INDUCTOR 10UH	
L1607		1-412-525-31	INDUCTOR 10UH	
L1608		1-412-525-31	INDUCTOR 10UH	
L1609		1-406-659-11	INDUCTOR 10UH	
L1610		1-406-971-21	INDUCTOR 10UH	
L1612		1-406-659-11	INDUCTOR 10UH	
L1616		1-406-984-21	INDUCTOR 1.5MH	
			< PHOTOCOUPLER >	
PH1601	⚠	6-600-187-01	PHOTO COUPLER PC123Y22JOOF	
			< PROTECTOR MODULE >	
PS1601	⚠	1-576-390-91	IC LINK 2.5A 50V	
PS1602	⚠	1-576-390-91	IC LINK 2.5A 50V	

REF.NO.		PART.NO	DESCRIPTION			REMARK
			< TRANSISTOR >			
Q1601		8-729-046-40	TRANSISTOR 2SK2663			
Q1602		8-729-023-22	TRANSISTOR 2SD2114K			
Q1603		8-729-023-22	TRANSISTOR 2SD2114K			
Q1604		8-729-216-22	TRANSISTOR 2SA1162-G			
Q1605		8-729-023-22	TRANSISTOR 2SD2114K			
Q1606		8-729-052-32	TRANSISTOR IRFIB7N50A-LF31			
Q1607		8-729-052-32	TRANSISTOR IRFIB7N50A-LF31			
Q1608		8-729-216-22	TRANSISTOR 2SA1162-G			
			< RESISTOR >			
R1601		1-260-302-51	CARBON	6.8	5%	1/2W
R1603		1-216-045-00	RES-CHIP	680	5%	1/10W
R1604		1-240-205-91	METAL	22M	5%	1/2W
R1605		1-216-009-91	RES-CHIP	22	5%	1/10W
R1606		1-249-389-11	CARBON	4.7	5%	1/4W
R1607		1-249-417-11	CARBON	1K	5%	1/4W
R1608		1-216-073-91	RES-CHIP	10K	5%	1/10W
R1609		1-216-041-00	RES-CHIP	470	5%	1/10W
R1610		1-216-295-91	SHORT CHIP	0		
R1611		1-260-131-11	CARBON	470K	5%	1/2W
R1612		1-215-485-00	METAL	470K	1%	1/4W
R1613	⚠	1-202-933-61	FUSIBLE	0.1	10%	1/2W
R1616		1-249-393-11	CARBON	10	5%	1/4W
R1617		1-249-377-11	CARBON	0.47	5%	1/4W
R1618		1-260-288-11	CARBON	0.47	5%	1/2W
R1619	⚠	1-202-933-61	FUSIBLE	0.1	10%	1/2W
R1620		1-216-073-91	RES-CHIP	10K	5%	1/10W
R1621		1-216-065-91	RES-CHIP	4.7K	5%	1/10W
R1622		1-216-073-91	RES-CHIP	10K	5%	1/10W
R1623		1-216-049-11	RES-CHIP	1K	5%	1/10W
R1624		1-215-481-00	METAL	330K	1%	1/4W
R1625		1-215-481-00	METAL	330K	1%	1/4W
R1626		1-215-481-00	METAL	330K	1%	1/4W
R1627		1-215-859-00	METAL OXIDE	22	5%	1W
R1628		1-208-810-11	METAL CHIP	15K	0.5%	1/10W
R1629		1-208-806-11	METAL CHIP	10K	0.5%	1/10W
R1630		1-216-073-91	RES-CHIP	10K	5%	1/10W
R1631		1-216-073-91	RES-CHIP	10K	5%	1/10W
R1632		1-249-393-11	CARBON	10	5%	1/4W
R1633		1-216-073-91	RES-CHIP	10K	5%	1/10W
R1634		1-249-393-11	CARBON	10	5%	1/4W
R1635		1-216-073-91	RES-CHIP	10K	5%	1/10W
R1638		1-202-965-11	METAL	0.02	10%	2W
R1640		1-216-350-11	METAL OXIDE	1.2	5%	1W
R1641		1-216-049-11	RES-CHIP	1K	5%	1/10W
R1642		1-216-057-00	RES-CHIP	2.2K	5%	1/10W
R1643		1-208-790-11	METAL CHIP	2.2K	0.5%	1/10W
R1644		1-216-025-11	RES-CHIP	100	5%	1/10W

Note : The components identified by shading and marked ⚠ are critical for safety. Replace only with the part numbers specified in the parts list.

REF.NO.		PART.NO	DESCRIPTION	REMARK
R1645		1-216-017-91	RES-CHIP 47 5% 1/10W	
R1646		1-216-057-00	RES-CHIP 2.2K 5% 1/10W	
R1647		1-216-041-00	RES-CHIP 470 5% 1/10W	
R1648		1-216-089-91	RES-CHIP 47K 5% 1/10W	
R1649		1-216-049-11	RES-CHIP 1K 5% 1/10W	
R1650		1-208-789-11	METAL CHIP 2K 0.5% 1/10W	
R1651	⚠	1-205-998-11	CEMENTED 1 5% 10W	
R1652	⚠	1-205-998-11	CEMENTED 1 5% 10W	
R1653	⚠	1-202-719-00	SOLID 1M 20% 1/2W	
R1654		1-249-377-11	CARBON 0.47 5% 1/4W	
R1655		1-249-377-11	CARBON 0.47 5% 1/4W	
R1656		1-215-904-11	METAL OXIDE 100K 5% 2W	
R1657		1-215-904-11	METAL OXIDE 100K 5% 2W	
R1658		1-216-295-91	SHORT CHIP 0	
R1660		1-216-295-91	SHORT CHIP 0	
R1662	⚠	1-218-265-11	METAL 8.2M 5% 1W	
R1664		1-216-295-91	SHORT CHIP 0	
R1665		1-208-782-11	METAL CHIP 1K 0.5% 1/10W	
R1666		1-208-802-11	METAL CHIP 6.8K 0.5% 1/10W	
R1667		1-208-804-11	METAL CHIP 8.2K 0.5% 1/10W	
R1668		1-208-807-11	METAL CHIP 11K 0.5% 1/10W	
R1669		1-216-041-00	RES-CHIP 470 5% 1/10W	
R1670		1-208-806-11	METAL CHIP 10K 0.5% 1/10W	
R1671		1-216-041-00	RES-CHIP 470 5% 1/10W	
			< RELAY >	
RY1601	⚠	1-755-388-11	RELAY (AC POWER)	
			< TRANSFORMER >	
T1601	⚠	1-431-852-11	TRANSFORMER, CONVERTER (SRT)	
T1603	⚠	1-435-512-21	TRANSFORMER, CONVERTER (PIT)	
T1605	⚠	1-433-488-31	TRANSFORMER, LINE FILTER	
			< THERMISTOR >	
TH1601		1-803-586-11	THERMISTOR, NTC	
			< VARISTOR >	
VD1602	⚠	1-804-995-11	VARISTOR	

* A-1405-807-A H1 Board, Complete

		< CAPACITOR >	
C4402	1-164-156-11	CERAMIC CHIP 0.1UF	25V
C4403	1-126-382-11	ELECT 100UF	20.00% 16V
		< CONNECTOR >	
CN4404	* 1-564-520-11	PLUG, CONNECTOR 5P	
		< DIODE >	
D4401	8-719-069-55	DIODE UDZSTE-175.6B	
D4402	8-719-069-55	DIODE UDZSTE-175.6B	
		< IC >	
IC4401	8-742-180-30	HYB IC SBX3081-51(30)	
		< RESISTOR >	
R4401	1-216-837-11	METAL CHIP 22K 5% 1/10W	
R4402	1-216-805-11	METAL CHIP 47 5% 1/10W	
R4420	1-216-833-11	METAL CHIP 10K 5% 1/10W	
R4421	1-216-829-11	METAL CHIP 4.7K 5% 1/10W	
R4422	1-216-864-11	SHORT CHIP 0	
R4423	1-216-833-11	METAL CHIP 10K 5% 1/10W	
R4424	1-216-829-11	METAL CHIP 4.7K 5% 1/10W	
		< SWITCH >	
S4402	1-572-198-11	SWITCH, KEYBOARD	
S4403	1-572-198-11	SWITCH, KEYBOARD	
S4404	1-572-198-11	SWITCH, KEYBOARD	
S4405	1-572-198-11	SWITCH, KEYBOARD	
S4406	1-572-198-11	SWITCH, KEYBOARD	

* A-1405-808-A H2 Board, Complete

		< CAPACITOR >	
C4403	1-126-601-11	ELECT CHIP 2.2UF	20.00% 50V
C4404	1-124-779-00	ELECT CHIP 10UF	20.00% 16V
		< CONNECTOR >	
CN4401	* 1-564-522-11	PLUG, CONNECTOR 7P	
CN4402	* 1-564-520-11	PLUG, CONNECTOR 5P	
		< DIODE >	
D4401	8-719-053-43	DIODE SLR-325VCT31	
D4402	8-719-064-11	DIODE SPR-325MVW	
D4405	8-719-064-11	DIODE SPR-325MVW	
		< TRANSISTOR >	
Q4401	8-729-900-53	TRANSISTOR DTC114EK	
Q4402	8-729-027-23	TRANSISTOR DTA114EKA-T146	
Q4403	8-729-120-28	TRANSISTOR 2SC1623-L5L6	
Q4404	8-729-900-53	TRANSISTOR DTC114EK	
Q4405	8-729-027-23	TRANSISTOR DTA114EKA-T146	
Q4406	8-729-010-29	TRANSISTOR MSD601-RST1	
Q4407	8-729-010-29	TRANSISTOR MSD601-RST1	

Note : The components identified by shading and marked ⚠ are critical for safety. Replace only with the part numbers specified in the parts list.

REF.NO.		PART.NO	DESCRIPTION			REMARK
			< RESISTOR >			
R4402		1-216-809-11	METAL CHIP	100	5%	1/10W
R4403		1-216-809-11	METAL CHIP	100	5%	1/10W
R4404		1-216-817-11	METAL CHIP	470	5%	1/10W
R4405		1-216-817-11	METAL CHIP	470	5%	1/10W
R4406		1-216-845-11	METAL CHIP	100K	5%	1/10W
R4407		1-216-841-11	METAL CHIP	47K	5%	1/10W
R4408		1-216-821-11	METAL CHIP	1K	5%	1/10W
R4409		1-216-805-11	METAL CHIP	47	5%	1/10W
R4410		1-216-833-11	METAL CHIP	10K	5%	1/10W
R4411		1-216-821-11	METAL CHIP	1K	5%	1/10W
R4412		1-216-805-11	METAL CHIP	47	5%	1/10W
R4415		1-216-864-11	SHORT CHIP	0		
			< SWITCH >			
S4401	⚠	1-554-118-00	SWITCH, PUSH (1 KEY)			

* A-1405-806-A H3 Board, Complete

			< CAPACITOR >			
C4305		1-162-968-11	CERAMIC CHIP 0.0047UF	10.00%		50V
C4307		1-162-968-11	CERAMIC CHIP 0.0047UF	10.00%		50V
C4309		1-162-927-11	CERAMIC CHIP 100PF	5.00%		50V
			< CONNECTOR >			
CN4301	*	1-564-521-41	PLUG, CONNECTOR 6P			
CN4302	*	1-564-520-11	PLUG, CONNECTOR 5P			
CN4303	*	1-564-524-11	PLUG, CONNECTOR 9P			
			< DIODE >			
D4301		8-719-016-73	DIODE STZ6.8T			
D4302		8-719-016-73	DIODE STZ6.8T			
D4303		8-719-016-73	DIODE STZ6.8T			
D4304		8-719-016-73	DIODE STZ6.8T			
D4305		8-719-016-73	DIODE STZ6.8T			
D4306		8-719-016-73	DIODE STZ6.8T			
			< SOCKET >			
J4301		1-779-947-11	TERMINAL BLOCK, S			
J4302		1-785-448-11	JACK			
			< COIL >			
L4301		1-414-189-31	INDUCTOR	100UH		
L4302		1-414-189-31	INDUCTOR	100UH		
L4303		1-410-985-42	INDUCTOR	0.22UH		
			< RESISTOR >			
R4301		1-216-813-11	METAL CHIP	220	5%	1/10W
R4303		1-216-813-11	METAL CHIP	220	5%	1/10W
R4305		1-216-821-11	METAL CHIP	1K	5%	1/10W
R4307		1-216-849-11	METAL CHIP	220K	5%	1/10W
R4308		1-216-849-11	METAL CHIP	220K	5%	1/10W
R4309		1-216-813-11	METAL CHIP	220	5%	1/10W
R4311		1-216-813-11	METAL CHIP	220	5%	1/10W
R4312		1-216-864-11	SHORT CHIP	0		
R4313		1-216-864-11	SHORT CHIP	0		

* A-1302-407-A C Board, Complete

	*	4-096-861-01	SHIELD C LID			
	*	4-096-862-01	BLOCK C RADIATION (S)			
	*	4-096-863-01	SHIELD, C (BOT)			
	*	4-096-864-01	BLOCK C RADIATION (L)			
		7-621-284-20	SCREW +P 2.6X6			
			< CAPACITOR >			
C2046		1-164-156-11	CERAMIC CHIP 0.1UF			25V
C2047		1-164-505-11	CERAMIC CHIP 2.2UF			16V
C2048		1-164-156-11	CERAMIC CHIP 0.1UF			25V
C2049		1-117-370-11	CERAMIC CHIP 10UF			10V
C2050		1-164-505-11	CERAMIC CHIP 2.2UF			16V
C2052		1-117-370-11	CERAMIC CHIP 10UF			10V
C2072		1-164-156-11	CERAMIC CHIP 0.1UF			25V
C2079		1-164-156-11	CERAMIC CHIP 0.1UF			25V
C2087		1-164-156-11	CERAMIC CHIP 0.1UF			25V
C2088		1-164-156-11	CERAMIC CHIP 0.1UF			25V
C2501		1-164-156-11	CERAMIC CHIP 0.1UF			25V
C2502		1-117-370-11	CERAMIC CHIP 10UF			10V
C2503		1-164-156-11	CERAMIC CHIP 0.1UF			25V
C2504		1-164-156-11	CERAMIC CHIP 0.1UF			25V
C2506		1-164-505-11	CERAMIC CHIP 2.2UF			16V
C2507		1-164-156-11	CERAMIC CHIP 0.1UF			25V
C2509		1-117-370-11	CERAMIC CHIP 10UF			10V
C2510		1-164-156-11	CERAMIC CHIP 0.1UF			25V
C2512		1-164-156-11	CERAMIC CHIP 0.1UF			25V
C2513		1-164-156-11	CERAMIC CHIP 0.1UF			25V
C2514		1-164-156-11	CERAMIC CHIP 0.1UF			25V
C2515		1-128-992-21	ELECT CHIP 47UF		20%	25V
C2516		1-128-992-21	ELECT CHIP 47UF		20%	25V
C2517		1-164-156-11	CERAMIC CHIP 0.1UF			25V
C2518		1-164-505-11	CERAMIC CHIP 2.2UF			16V
C2519		1-164-505-11	CERAMIC CHIP 2.2UF			16V
C2520		1-128-992-21	ELECT CHIP 47UF		20%	25V
C2521		1-164-156-11	CERAMIC CHIP 0.1UF			25V
C2522		1-164-156-11	CERAMIC CHIP 0.1UF			25V
C2523		1-164-156-11	CERAMIC CHIP 0.1UF			25V
C2524		1-164-156-11	CERAMIC CHIP 0.1UF			25V
C2527		1-128-992-21	ELECT CHIP 47UF		20%	25V

REF.NO.	PART.NO	DESCRIPTION	REMARK	
C2529	1-164-156-11	CERAMIC CHIP 0.1UF		25V
C2530	1-164-156-11	CERAMIC CHIP 0.1UF		25V
C2531	1-164-156-11	CERAMIC CHIP 0.1UF		25V
C2551	1-164-156-11	CERAMIC CHIP 0.1UF		25V
C2552	1-164-156-11	CERAMIC CHIP 0.1UF		25V
C2553	1-128-992-21	ELECT CHIP 47UF	20%	25V
C2554	1-164-156-11	CERAMIC CHIP 0.1UF		25V
C2555	1-164-156-11	CERAMIC CHIP 0.1UF		25V
C2556	1-164-156-11	CERAMIC CHIP 0.1UF		25V
C2557	1-128-992-21	ELECT CHIP 47UF	20%	25V
C2558	1-164-156-11	CERAMIC CHIP 0.1UF		25V
C2601	1-164-156-11	CERAMIC CHIP 0.1UF		25V
C2602	1-117-370-11	CERAMIC CHIP 10UF		10V
C2603	1-164-156-11	CERAMIC CHIP 0.1UF		25V
C2604	1-164-156-11	CERAMIC CHIP 0.1UF		25V
C2606	1-164-505-11	CERAMIC CHIP 2.2UF		16V
C2607	1-164-156-11	CERAMIC CHIP 0.1UF		25V
C2609	1-117-370-11	CERAMIC CHIP 10UF		10V
C2610	1-164-156-11	CERAMIC CHIP 0.1UF		25V
C2612	1-164-156-11	CERAMIC CHIP 0.1UF		25V
C2613	1-164-156-11	CERAMIC CHIP 0.1UF		25V
C2615	1-164-156-11	CERAMIC CHIP 0.1UF		25V
C2616	1-126-396-11	ELECT CHIP 47UF	20.00%	16V
C2617	1-164-156-11	CERAMIC CHIP 0.1UF		25V
C2618	1-164-505-11	CERAMIC CHIP 2.2UF		16V
C2619	1-164-505-11	CERAMIC CHIP 2.2UF		16V
C2620	1-126-204-11	ELECT CHIP 47UF	20.00%	16V
C2621	1-164-156-11	CERAMIC CHIP 0.1UF		25V
C2622	1-164-156-11	CERAMIC CHIP 0.1UF		25V
C2623	1-164-156-11	CERAMIC CHIP 0.1UF		25V
C2624	1-164-156-11	CERAMIC CHIP 0.1UF		25V
C2625	1-164-156-11	CERAMIC CHIP 0.1UF		25V
C2626	1-164-156-11	CERAMIC CHIP 0.1UF		25V
C2627	1-126-396-11	ELECT CHIP 47UF	20.00%	16V
C2628	1-128-992-21	ELECT CHIP 47UF	20%	25V
C2629	1-164-156-11	CERAMIC CHIP 0.1UF		25V
C2630	1-164-156-11	CERAMIC CHIP 0.1UF		25V
C2631	1-128-992-21	ELECT CHIP 47UF	20%	25V
C2632	1-164-156-11	CERAMIC CHIP 0.1UF		25V
C2651	1-164-156-11	CERAMIC CHIP 0.1UF		25V
C2652	1-164-156-11	CERAMIC CHIP 0.1UF		25V
C2653	1-128-992-21	ELECT CHIP 47UF	20%	25V
C2654	1-164-156-11	CERAMIC CHIP 0.1UF		25V
C2655	1-164-156-11	CERAMIC CHIP 0.1UF		25V
C2656	1-164-156-11	CERAMIC CHIP 0.1UF		25V
C2657	1-164-156-11	CERAMIC CHIP 0.1UF		25V
C2658	1-128-992-21	ELECT CHIP 47UF	20%	25V
C2659	1-164-156-11	CERAMIC CHIP 0.1UF		25V
C2661	1-128-992-21	ELECT CHIP 47UF	20%	25V
C2662	1-164-156-11	CERAMIC CHIP 0.1UF		25V
C2663	1-164-156-11	CERAMIC CHIP 0.1UF		25V
C2664	1-164-156-11	CERAMIC CHIP 0.1UF		25V
C2665	1-164-156-11	CERAMIC CHIP 0.1UF		25V
C2666	1-128-992-21	ELECT CHIP 47UF	20%	25V
C2701	1-164-156-11	CERAMIC CHIP 0.1UF		25V
C2702	1-117-370-11	CERAMIC CHIP 10UF		10V
C2703	1-164-156-11	CERAMIC CHIP 0.1UF		25V
C2704	1-164-156-11	CERAMIC CHIP 0.1UF		25V
C2706	1-164-505-11	CERAMIC CHIP 2.2UF		16V
C2707	1-164-156-11	CERAMIC CHIP 0.1UF		25V
C2709	1-117-370-11	CERAMIC CHIP 10UF		10V
C2710	1-164-156-11	CERAMIC CHIP 0.1UF		25V
C2712	1-164-156-11	CERAMIC CHIP 0.1UF		25V
C2713	1-164-156-11	CERAMIC CHIP 0.1UF		25V
C2715	1-164-156-11	CERAMIC CHIP 0.1UF		25V
C2716	1-126-396-11	ELECT CHIP 47UF	20.00%	16V
C2717	1-164-156-11	CERAMIC CHIP 0.1UF		25V
C2718	1-164-505-11	CERAMIC CHIP 2.2UF		16V
C2719	1-164-505-11	CERAMIC CHIP 2.2UF		16V
C2720	1-126-396-11	ELECT CHIP 47UF	20.00%	16V
C2721	1-164-156-11	CERAMIC CHIP 0.1UF		25V
C2722	1-164-156-11	CERAMIC CHIP 0.1UF		25V
C2723	1-164-156-11	CERAMIC CHIP 0.1UF		25V
C2724	1-164-156-11	CERAMIC CHIP 0.1UF		25V
C2725	1-164-156-11	CERAMIC CHIP 0.1UF		25V
C2727	1-126-396-11	ELECT CHIP 47UF	20.00%	16V
C2729	1-164-156-11	CERAMIC CHIP 0.1UF		25V
C2801	1-164-156-11	CERAMIC CHIP 0.1UF		25V
C2802	1-128-992-21	ELECT CHIP 47UF	20%	25V
C3011	1-117-681-11	ELECT CHIP 100UF	20.00%	16V
C3012	1-117-681-11	ELECT CHIP 100UF	20.00%	16V
C3013	1-117-681-11	ELECT CHIP 100UF	20.00%	16V
C3014	1-117-681-11	ELECT CHIP 100UF	20.00%	16V
C3015	1-117-681-11	ELECT CHIP 100UF	20.00%	16V
C3016	1-117-681-11	ELECT CHIP 100UF	20.00%	16V
C3017	1-117-681-11	ELECT CHIP 100UF	20.00%	16V
C3018	1-126-204-11	ELECT CHIP 47UF	20.00%	16V
C3019	1-164-156-11	CERAMIC CHIP 0.1UF		25V
C3020	1-164-156-11	CERAMIC CHIP 0.1UF		25V
C3021	1-164-156-11	CERAMIC CHIP 0.1UF		25V
C3022	1-164-156-11	CERAMIC CHIP 0.1UF		25V
C3023	1-164-156-11	CERAMIC CHIP 0.1UF		25V
C3024	1-164-156-11	CERAMIC CHIP 0.1UF		25V
C3025	1-164-156-11	CERAMIC CHIP 0.1UF		25V
C3026	1-164-156-11	CERAMIC CHIP 0.1UF		25V
C3027	1-164-156-11	CERAMIC CHIP 0.1UF		25V
C3028	1-164-156-11	CERAMIC CHIP 0.1UF		25V
C3029	1-164-156-11	CERAMIC CHIP 0.1UF		25V
C3030	1-164-156-11	CERAMIC CHIP 0.1UF		25V
C3031	1-164-156-11	CERAMIC CHIP 0.1UF		25V

REF.NO.	PART.NO	DESCRIPTION	REMARK
C3032	1-164-156-11	CERAMIC CHIP 0.1UF	25V
C3033	1-164-156-11	CERAMIC CHIP 0.1UF	25V
C3034	1-164-156-11	CERAMIC CHIP 0.1UF	25V
C3035	1-117-681-11	ELECT CHIP 100UF	20.00% 16V
C3036	1-117-681-11	ELECT CHIP 100UF	20.00% 16V
C3037	1-117-681-11	ELECT CHIP 100UF	20.00% 16V
C3038	1-117-681-11	ELECT CHIP 100UF	20.00% 16V
C3054	1-117-681-11	ELECT CHIP 100UF	20.00% 16V
C3055	1-117-681-11	ELECT CHIP 100UF	20.00% 16V
C3056	1-117-681-11	ELECT CHIP 100UF	20.00% 16V
C3057	1-126-204-11	ELECT CHIP 47UF	20.00% 16V
C3061	1-162-927-11	CERAMIC CHIP 100PF	5.00% 50V
C3062	1-162-927-11	CERAMIC CHIP 100PF	5.00% 50V
C3063	1-126-601-11	ELECT CHIP 2.2UF	20.00% 50V
C3064	1-126-601-11	ELECT CHIP 2.2UF	20.00% 50V
C3065	1-126-601-11	ELECT CHIP 2.2UF	20.00% 50V
C3072	1-164-156-11	CERAMIC CHIP 0.1UF	25V
C3073	1-164-156-11	CERAMIC CHIP 0.1UF	25V
C3074	1-164-156-11	CERAMIC CHIP 0.1UF	25V
C3075	1-126-210-21	CAP ELECT 220UF	20.00% 4V
C3076	1-115-156-11	CERAMIC CHIP 1UF	10V
C3077	1-162-964-11	CERAMIC CHIP 0.001UF	10.00% 50V
C3078	1-162-964-11	CERAMIC CHIP 0.001UF	10.00% 50V
C3079	1-162-964-11	CERAMIC CHIP 0.001UF	10.00% 50V
C3080	1-162-964-11	CERAMIC CHIP 0.001UF	10.00% 50V
C3081	1-162-964-11	CERAMIC CHIP 0.001UF	10.00% 50V
C3082	1-162-964-11	CERAMIC CHIP 0.001UF	10.00% 50V
C3083	1-162-964-11	CERAMIC CHIP 0.001UF	10.00% 50V
C3084	1-162-964-11	CERAMIC CHIP 0.001UF	10.00% 50V
C3085	1-162-919-11	CERAMIC CHIP 22PF	5.00% 50V
C3086	1-162-919-11	CERAMIC CHIP 22PF	5.00% 50V
C3087	1-162-964-11	CERAMIC CHIP 0.001UF	10.00% 50V
C3088	1-162-964-11	CERAMIC CHIP 0.001UF	10.00% 50V
C3089	1-162-964-11	CERAMIC CHIP 0.001UF	10.00% 50V
C3090	1-162-964-11	CERAMIC CHIP 0.001UF	10.00% 50V
C3091	1-162-964-11	CERAMIC CHIP 0.001UF	10.00% 50V
C3092	1-162-964-11	CERAMIC CHIP 0.001UF	10.00% 50V
C3093	1-124-779-00	ELECT CHIP 10UF	20.00% 16V
C3094	1-162-964-11	CERAMIC CHIP 0.001UF	10.00% 50V
C3095	1-162-964-11	CERAMIC CHIP 0.001UF	10.00% 50V
C3096	1-124-779-00	ELECT CHIP 10UF	20.00% 16V
C3097	1-162-964-11	CERAMIC CHIP 0.001UF	10.00% 50V
C3098	1-124-779-00	ELECT CHIP 10UF	20.00% 16V
C3099	1-162-964-11	CERAMIC CHIP 0.001UF	10.00% 50V
C3100	1-162-964-11	CERAMIC CHIP 0.001UF	10.00% 50V
C3101	1-164-156-11	CERAMIC CHIP 0.1UF	25V
C3102	1-115-156-11	CERAMIC CHIP 1UF	10V
C3103	1-164-156-11	CERAMIC CHIP 0.1UF	25V
C3104	1-124-779-00	ELECT CHIP 10UF	20.00% 16V
C3105	1-164-156-11	CERAMIC CHIP 0.1UF	25V
C3106	1-162-970-11	CERAMIC CHIP 0.01UF	10.00% 25V
C3107	1-162-970-11	CERAMIC CHIP 0.01UF	10.00% 25V
C3108	1-126-204-11	ELECT CHIP 47UF	20.00% 16V
C3109	1-126-204-11	ELECT CHIP 47UF	20.00% 16V
C3110	1-162-970-11	CERAMIC CHIP 0.01UF	10.00% 25V
C3111	1-162-970-11	CERAMIC CHIP 0.01UF	10.00% 25V
C3112	1-162-970-11	CERAMIC CHIP 0.01UF	10.00% 25V
C3113	1-162-970-11	CERAMIC CHIP 0.01UF	10.00% 25V
C3114	1-162-970-11	CERAMIC CHIP 0.01UF	10.00% 25V
C3115	1-162-970-11	CERAMIC CHIP 0.01UF	10.00% 25V
C3116	1-162-970-11	CERAMIC CHIP 0.01UF	10.00% 25V
C3117	1-162-970-11	CERAMIC CHIP 0.01UF	10.00% 25V
C3118	1-162-970-11	CERAMIC CHIP 0.01UF	10.00% 25V
C3119	1-162-970-11	CERAMIC CHIP 0.01UF	10.00% 25V
C3120	1-162-970-11	CERAMIC CHIP 0.01UF	10.00% 25V
C3121	1-162-970-11	CERAMIC CHIP 0.01UF	10.00% 25V
C3122	1-162-970-11	CERAMIC CHIP 0.01UF	10.00% 25V
C3123	1-162-970-11	CERAMIC CHIP 0.01UF	10.00% 25V
C3124	1-162-970-11	CERAMIC CHIP 0.01UF	10.00% 25V
C3125	1-162-970-11	CERAMIC CHIP 0.01UF	10.00% 25V
C3126	1-162-970-11	CERAMIC CHIP 0.01UF	10.00% 25V
C3127	1-162-970-11	CERAMIC CHIP 0.01UF	10.00% 25V
C3128	1-162-970-11	CERAMIC CHIP 0.01UF	10.00% 25V
C3129	1-162-970-11	CERAMIC CHIP 0.01UF	10.00% 25V
C3130	1-162-970-11	CERAMIC CHIP 0.01UF	10.00% 25V
C3131	1-162-970-11	CERAMIC CHIP 0.01UF	10.00% 25V
C3133	1-162-964-11	CERAMIC CHIP 0.001UF	10.00% 50V
C3134	1-162-964-11	CERAMIC CHIP 0.001UF	10.00% 50V
C3135	1-124-779-00	ELECT CHIP 10UF	20.00% 16V
C3136	1-162-964-11	CERAMIC CHIP 0.001UF	10.00% 50V
C3138	1-126-601-11	ELECT CHIP 2.2UF	20.00% 50V
C3139	1-126-601-11	ELECT CHIP 2.2UF	20.00% 50V
C3140	1-126-601-11	ELECT CHIP 2.2UF	20.00% 50V
C3141	1-162-964-11	CERAMIC CHIP 0.001UF	10.00% 50V
C3142	1-126-603-11	ELECT CHIP 4.7UF	20.00% 35V
C3143	1-162-970-11	CERAMIC CHIP 0.01UF	10.00% 25V
C3144	1-126-204-11	ELECT CHIP 47UF	20.00% 16V
C3145	1-107-826-11	CERAMIC CHIP 0.1UF	10.00% 16V
C4000	1-128-992-21	ELECT CHIP 47UF	20% 25V
C4001	1-162-919-11	CERAMIC CHIP 22PF	5.00% 50V
C4002	1-162-919-11	CERAMIC CHIP 22PF	5.00% 50V
C4003	1-164-156-11	CERAMIC CHIP 0.1UF	25V
C4004	1-164-156-11	CERAMIC CHIP 0.1UF	25V
C4005	1-164-156-11	CERAMIC CHIP 0.1UF	25V
C4006	1-164-156-11	CERAMIC CHIP 0.1UF	25V
C4007	1-164-156-11	CERAMIC CHIP 0.1UF	25V
C4008	1-164-156-11	CERAMIC CHIP 0.1UF	25V
C4009	1-164-156-11	CERAMIC CHIP 0.1UF	25V
C4010	1-164-156-11	CERAMIC CHIP 0.1UF	25V
C4011	1-164-156-11	CERAMIC CHIP 0.1UF	25V

REF.NO.	PART.NO	DESCRIPTION	REMARK
C4012	1-127-715-91	CERAMIC CHIP 0.22UF	10% 16V
C4013	1-164-156-11	CERAMIC CHIP 0.1UF	25V
C4015	1-127-715-91	CERAMIC CHIP 0.22UF	10% 16V
C4018	1-127-715-91	CERAMIC CHIP 0.22UF	10% 16V
C4020	1-127-715-91	CERAMIC CHIP 0.22UF	10% 16V
C4021	1-164-156-11	CERAMIC CHIP 0.1UF	25V
C4022	1-164-156-11	CERAMIC CHIP 0.1UF	25V
C4023	1-164-156-11	CERAMIC CHIP 0.1UF	25V
C4024	1-164-156-11	CERAMIC CHIP 0.1UF	25V
C4025	1-164-156-11	CERAMIC CHIP 0.1UF	25V
C4026	1-164-156-11	CERAMIC CHIP 0.1UF	25V
C4028	1-165-176-11	CERAMIC CHIP 0.047UF	10.00% 16V
C4030	1-165-176-11	CERAMIC CHIP 0.047UF	10.00% 16V
C4032	1-165-176-11	CERAMIC CHIP 0.047UF	10.00% 16V
C4033	1-164-156-11	CERAMIC CHIP 0.1UF	25V
C4035	1-164-156-11	CERAMIC CHIP 0.1UF	25V
C4036	1-165-176-11	CERAMIC CHIP 0.047UF	10.00% 16V
C4039	1-164-156-11	CERAMIC CHIP 0.1UF	25V
C4040	1-164-156-11	CERAMIC CHIP 0.1UF	25V
C4041	1-164-156-11	CERAMIC CHIP 0.1UF	25V
C4042	1-164-156-11	CERAMIC CHIP 0.1UF	25V
C4043	1-164-156-11	CERAMIC CHIP 0.1UF	25V
C4044	1-164-156-11	CERAMIC CHIP 0.1UF	25V
C4045	1-164-156-11	CERAMIC CHIP 0.1UF	25V
C4048	1-128-992-21	ELECT CHIP 47UF	20% 25V
C4049	1-165-176-11	CERAMIC CHIP 0.047UF	10.00% 16V
C4050	1-165-176-11	CERAMIC CHIP 0.047UF	10.00% 16V
C4051	1-128-992-21	ELECT CHIP 47UF	20% 25V
C4052	1-128-992-21	ELECT CHIP 47UF	20% 25V
C4053	1-127-715-91	CERAMIC CHIP 0.22UF	10% 16V
C4054	1-127-715-91	CERAMIC CHIP 0.22UF	10% 16V
C4068	1-162-927-11	CERAMIC CHIP 100PF	5.00% 50V
C4069	1-124-779-00	ELECT CHIP 10UF	20.00% 16V
C4070	1-124-779-00	ELECT CHIP 10UF	20.00% 16V
C4071	1-124-779-00	ELECT CHIP 10UF	20.00% 16V
C4077	1-124-779-00	ELECT CHIP 10UF	20.00% 16V
C4078	1-124-779-00	ELECT CHIP 10UF	20.00% 16V
C4079	1-124-779-00	ELECT CHIP 10UF	20.00% 16V
C4080	1-164-156-11	CERAMIC CHIP 0.1UF	25V
C4086	1-107-826-11	CERAMIC CHIP 0.1UF	10.00% 16V
C4090	1-107-826-11	CERAMIC CHIP 0.1UF	10.00% 16V
C4091	1-162-927-11	CERAMIC CHIP 100PF	5.00% 50V
		< CONNECTOR >	
CN2551	1-794-823-11	CONNECTOR (ZIF), FPC/FFC 32P	
CN2601	1-794-823-11	CONNECTOR (ZIF), FPC/FFC 32P	
CN2651	1-794-823-11	CONNECTOR (ZIF), FPC/FFC 32P	
CN3002	* 1-760-388-11	CONNECTOR PIN (SMD) 9P	
CN3003	* 1-695-223-21	PIN, CONNECTOR (SMD) 10P	
CN3004	* 1-764-007-11	PIN, CONNECTOR (SMD) 12P	
CN3005	1-770-629-21	PIN, CONNECTOR 12P	
CN3006	1-770-629-21	PIN, CONNECTOR 12P	
CN3007	1-770-621-21	PIN, CONNECTOR 4P	
CN3008	* 1-766-376-11	PIN, CONNECTOR (1.5MM)(SMD) 9P	
CN3009	1-766-382-21	PIN, CONNECTOR (1.5MM)(SMD)10P	
		< DIODE >	
D3001	8-719-050-37	DIODE M1MA152WA-T1	
D3007	8-719-041-97	DIODE MA113-(TX)	
		< FERRITE BEAD >	
FB2010	1-414-921-11	FERRITE 0UH	
FB2012	1-414-921-11	FERRITE 0UH	
FB2015	1-414-921-11	FERRITE 0UH	
FB2501	1-414-921-11	FERRITE 0UH	
FB2502	1-414-921-11	FERRITE 0UH	
FB2504	1-414-921-11	FERRITE 0UH	
FB2505	1-414-921-11	FERRITE 0UH	
FB2506	1-414-921-11	FERRITE 0UH	
FB2601	1-414-921-11	FERRITE 0UH	
FB2602	1-414-921-11	FERRITE 0UH	
FB2603	1-414-921-11	FERRITE 0UH	
FB2604	1-414-921-11	FERRITE 0UH	
FB2651	1-414-921-11	FERRITE 0UH	
FB2653	1-414-921-11	FERRITE 0UH	
FB2654	1-414-921-11	FERRITE 0UH	
FB2701	1-414-921-11	FERRITE 0UH	
FB2702	1-414-921-11	FERRITE 0UH	
FB2704	1-414-921-11	FERRITE 0UH	
		< FILTER >	
FL3001	1-233-830-11	FERRITE 37UH	
FL3002	1-233-830-11	FERRITE 37UH	
FL3003	1-233-830-11	FERRITE 37UH	
FL3004	1-233-830-11	FERRITE 37UH	
FL3005	1-233-830-11	FERRITE 37UH	
FL3006	1-233-830-11	FERRITE 37UH	
FL3007	1-233-830-11	FERRITE 37UH	
FL3008	1-233-830-11	FERRITE 37UH	
		< IC >	
IC2006	8-759-490-41	IC TC74VHCT541AFT(EL)	
IC2007	8-759-490-41	IC TC74VHCT541AFT(EL)	
IC2009	8-759-442-07	IC LM75CIMX-5	
IC2011	8-759-672-80	IC M24C02-MN6T(A)	
IC2012	8-759-042-02	IC S-80743AL-A7-S	
IC2501	8-752-106-13	IC CXA7001R-T6	
IC2601	8-752-106-13	IC CXA7001R-T6	

REF.NO.	PART.NO	DESCRIPTION	REMARK
IC2701	8-752-106-13	IC CXA7001R-T6	
IC2801	8-759-388-31	IC PQ20VZ1U	
IC3003	8-759-196-93	IC TC7SH00FU-TE85R	
IC3004	6-803-215-01	IC DPS9450AA1T	
IC3005	8-759-926-98	IC SN74HC4040ANS	
IC3006	8-752-072-94	IC CXA1875AM-T4	
IC3007	8-759-387-54	IC S-80727-SN-DQ-T1	
IC3008	8-759-669-75	IC TLC2932IPWR	
IC3101	8-759-387-54	IC S-80727-SN-DQ-T1	
IC3102	6-702-985-01	IC M24256-BWMN6T	
IC3103	6-702-974-01	IC CXD9671GG	
IC4000	6-803-214-01	IC VSP9427BC3T	
IC4003	6-704-465-01	IC MC74LVX8053DTR2	
		< COIL >	
L2004	1-414-754-11	INDUCTOR	10UH
L2501	1-414-754-11	INDUCTOR	10UH
L2502	1-414-754-11	INDUCTOR	10UH
L2504	1-414-754-11	INDUCTOR	10UH
L2505	1-414-754-11	INDUCTOR	10UH
L2506	1-414-754-11	INDUCTOR	10UH
L2601	1-414-754-11	INDUCTOR	10UH
L2602	1-414-754-11	INDUCTOR	10UH
L2603	1-414-754-11	INDUCTOR	10UH
L2604	1-414-754-11	INDUCTOR	10UH
L2605	1-414-754-11	INDUCTOR	10UH
L2651	1-414-754-11	INDUCTOR	10UH
L2652	1-414-754-11	INDUCTOR	10UH
L2701	1-414-754-11	INDUCTOR	10UH
L2702	1-414-754-11	INDUCTOR	10UH
L2704	1-414-754-11	INDUCTOR	10UH
L3001	1-409-556-11	INDUCTOR	47UH
L3003	1-409-556-11	INDUCTOR	47UH
L3004	1-409-556-11	INDUCTOR	47UH
L3005	1-409-556-11	INDUCTOR	47UH
L3009	1-409-556-11	INDUCTOR	47UH
L3010	1-409-556-11	INDUCTOR	47UH
L3011	1-409-556-11	INDUCTOR	47UH
L3012	1-409-556-11	INDUCTOR	47UH
L3013	1-412-029-11	INDUCTOR	10UH
L3014	1-412-028-11	INDUCTOR	4.7UH
L3015	1-412-028-11	INDUCTOR	4.7UH
L3016	1-412-029-11	INDUCTOR	10UH
L3017	1-412-029-11	INDUCTOR	10UH
L3018	1-412-029-11	INDUCTOR	10UH
L3019	1-412-058-11	INDUCTOR	10UH
L3101	1-412-029-11	INDUCTOR	10UH
L3102	1-412-029-11	INDUCTOR	10UH
L3103	1-412-029-11	INDUCTOR	10UH
L3104	1-412-029-11	INDUCTOR	10UH
L3105	1-412-029-11	INDUCTOR	10UH
L3106	1-412-029-11	INDUCTOR	10UH
L3107	1-412-029-11	INDUCTOR	10UH
L3108	1-412-029-11	INDUCTOR	10UH
L3109	1-412-029-11	INDUCTOR	10UH
L4000	1-412-029-11	INDUCTOR	10UH
L4001	1-412-028-11	INDUCTOR	4.7UH
L4002	1-412-028-11	INDUCTOR	4.7UH
L4003	1-412-029-11	INDUCTOR	10UH
L4004	1-469-525-91	INDUCTOR	10UH
L4005	1-469-525-91	INDUCTOR	10UH
L4006	1-469-525-91	INDUCTOR	10UH
		< TRANSISTOR >	
Q2001	8-729-422-33	TRANSISTOR 2SD601A-Q-TX	
Q2002	8-729-027-23	TRANSISTOR DTA114EKA-T146	
Q2502	8-729-013-28	TRANSISTOR HN1B01FU-TE85R	
Q2504	8-729-013-28	TRANSISTOR HN1B01FU-TE85R	
Q2602	8-729-013-28	TRANSISTOR HN1B01FU-TE85R	
Q2604	8-729-013-28	TRANSISTOR HN1B01FU-TE85R	
Q2702	8-729-013-28	TRANSISTOR HN1B01FU-TE85R	
Q2704	8-729-013-28	TRANSISTOR HN1B01FU-TE85R	
Q3001	8-729-028-28	TRANSISTOR 2SK2036(TE85L)	
Q3002	8-729-028-28	TRANSISTOR 2SK2036(TE85L)	
Q3004	8-729-026-49	TRANSISTOR 2SA1037AK-T146-R	
Q3101	8-729-422-33	TRANSISTOR 2SD601A-Q-TX	
Q3102	8-729-027-23	TRANSISTOR DTA114EKA-T146	
Q3105	8-729-900-53	TRANSISTOR DTC114EK	
Q4000	8-729-013-28	TRANSISTOR HN1B01FU-TE85R	
Q4001	8-729-013-28	TRANSISTOR HN1B01FU-TE85R	
Q4002	8-729-013-28	TRANSISTOR HN1B01FU-TE85R	
Q4003	8-729-422-33	TRANSISTOR 2SD601A-Q-TX	
Q4004	8-729-422-33	TRANSISTOR 2SD601A-Q-TX	
Q4005	8-729-422-33	TRANSISTOR 2SD601A-Q-TX	
Q4006	8-729-422-33	TRANSISTOR 2SD601A-Q-TX	
Q4007	8-729-422-33	TRANSISTOR 2SD601A-Q-TX	
Q4008	8-729-422-33	TRANSISTOR 2SD601A-Q-TX	
Q4009	8-729-422-33	TRANSISTOR 2SD601A-Q-TX	
Q4010	8-729-422-33	TRANSISTOR 2SD601A-Q-TX	
Q4011	8-729-422-33	TRANSISTOR 2SD601A-Q-TX	
Q4012	8-729-422-33	TRANSISTOR 2SD601A-Q-TX	
Q4013	8-729-013-28	TRANSISTOR HN1B01FU-TE85R	
Q4014	8-729-013-28	TRANSISTOR HN1B01FU-TE85R	
Q4015	8-729-013-28	TRANSISTOR HN1B01FU-TE85R	
Q4016	8-729-422-33	TRANSISTOR 2SD601A-Q-TX	
Q4017	8-729-422-33	TRANSISTOR 2SD601A-Q-TX	
		< RESISTOR >	
JR4000	1-216-864-11	SHORT CHIP	0

REF.NO.	PART.NO	DESCRIPTION			REMARK
JR4001	1-216-864-11	SHORT CHIP	0		
JR4004	1-216-864-11	SHORT CHIP	0		
JR4005	1-216-864-11	SHORT CHIP	0		
JR4007	1-216-864-11	SHORT CHIP	0		
R2059	1-216-864-11	SHORT CHIP	0		
R2060	1-216-809-11	METAL CHIP	100	5%	1/10W
R2061	1-216-809-11	METAL CHIP	100	5%	1/10W
R2062	1-216-809-11	METAL CHIP	100	5%	1/10W
R2063	1-216-864-11	SHORT CHIP	0		
R2064	1-216-797-11	METAL CHIP	10	5%	1/10W
R2065	1-216-797-11	METAL CHIP	10	5%	1/10W
R2066	1-216-797-11	METAL CHIP	10	5%	1/10W
R2067	1-216-797-11	METAL CHIP	10	5%	1/10W
R2073	1-216-805-11	METAL CHIP	47	5%	1/10W
R2074	1-216-805-11	METAL CHIP	47	5%	1/10W
R2077	1-216-864-11	SHORT CHIP	0		
R2078	1-216-864-11	SHORT CHIP	0		
R2079	1-216-864-11	SHORT CHIP	0		
R2080	1-216-805-11	METAL CHIP	47	5%	1/10W
R2081	1-216-805-11	METAL CHIP	47	5%	1/10W
R2087	1-216-833-11	METAL CHIP	10K	5%	1/10W
R2088	1-216-833-11	METAL CHIP	10K	5%	1/10W
R2089	1-216-825-11	METAL CHIP	2.2K	5%	1/10W
R2090	1-216-864-11	SHORT CHIP	0		
R2091	1-216-864-11	SHORT CHIP	0		
R2092	1-216-864-11	SHORT CHIP	0		
R2093	1-216-864-11	SHORT CHIP	0		
R2094	1-216-797-11	METAL CHIP	10	5%	1/10W
R2095	1-216-797-11	METAL CHIP	10	5%	1/10W
R2501	1-216-833-11	METAL CHIP	10K	5%	1/10W
R2502	1-216-864-11	SHORT CHIP	0		
R2503	1-216-833-11	METAL CHIP	10K	5%	1/10W
R2504	1-216-813-11	METAL CHIP	220	5%	1/10W
R2505	1-216-805-11	METAL CHIP	47	5%	1/10W
R2506	1-216-805-11	METAL CHIP	47	5%	1/10W
R2507	1-216-864-11	SHORT CHIP	0		
R2508	1-216-864-11	SHORT CHIP	0		
R2510	1-216-864-11	SHORT CHIP	0		
R2511	1-216-864-11	SHORT CHIP	0		
R2512	1-216-864-11	SHORT CHIP	0		
R2513	1-218-877-11	METAL CHIP	18K	0.5%	1/10W
R2514	1-218-861-11	METAL CHIP	3.9K	0.5%	1/10W
R2516	1-218-863-11	METAL CHIP	4.7K	0.5%	1/10W
R2517	1-218-863-11	METAL CHIP	4.7K	0.5%	1/10W
R2519	1-218-853-11	METAL CHIP	1.8K	0.5%	1/10W
R2520	1-216-864-11	SHORT CHIP	0		
R2521	1-216-864-11	SHORT CHIP	0		
R2523	1-216-833-11	METAL CHIP	10K	5%	1/10W
R2524	1-216-864-11	SHORT CHIP	0		
R2525	1-216-864-11	SHORT CHIP	0		
R2526	1-216-864-11	SHORT CHIP	0		
R2529	1-218-867-11	METAL CHIP	6.8K	0.5%	1/10W
R2530	1-218-712-11	METAL CHIP	6.8K	0.5%	1/10W
R2532	1-218-702-11	METAL CHIP	2.7K	0.5%	1/10W
R2537	1-216-804-11	METAL CHIP	39	5%	1/10W
R2538	1-216-804-11	METAL CHIP	39	5%	1/10W
R2541	1-216-797-11	METAL CHIP	10	5%	1/10W
R2543	1-216-825-11	METAL CHIP	2.2K	5%	1/10W
R2545	1-216-825-11	METAL CHIP	2.2K	5%	1/10W
R2548	1-216-789-11	METAL CHIP	2.2	5%	1/10W
R2549	1-216-789-11	METAL CHIP	2.2	5%	1/10W
R2553	1-216-797-11	METAL CHIP	10	5%	1/10W
R2601	1-216-833-11	METAL CHIP	10K	5%	1/10W
R2602	1-216-864-11	SHORT CHIP	0		
R2603	1-216-833-11	METAL CHIP	10K	5%	1/10W
R2604	1-216-813-11	METAL CHIP	220	5%	1/10W
R2605	1-216-864-11	SHORT CHIP	0		
R2606	1-216-805-11	METAL CHIP	47	5%	1/10W
R2607	1-216-805-11	METAL CHIP	47	5%	1/10W
R2608	1-216-864-11	SHORT CHIP	0		
R2611	1-216-864-11	SHORT CHIP	0		
R2612	1-216-864-11	SHORT CHIP	0		
R2613	1-216-864-11	SHORT CHIP	0		
R2614	1-218-877-11	METAL CHIP	18K	0.5%	1/10W
R2615	1-218-861-11	METAL CHIP	3.9K	0.5%	1/10W
R2617	1-218-863-11	METAL CHIP	4.7K	0.5%	1/10W
R2618	1-218-863-11	METAL CHIP	4.7K	0.5%	1/10W
R2619	1-218-853-11	METAL CHIP	1.8K	0.5%	1/10W
R2620	1-216-864-11	SHORT CHIP	0		
R2621	1-216-864-11	SHORT CHIP	0		
R2624	1-216-833-11	METAL CHIP	10K	5%	1/10W
R2625	1-216-864-11	SHORT CHIP	0		
R2626	1-216-864-11	SHORT CHIP	0		
R2627	1-216-864-11	SHORT CHIP	0		
R2630	1-218-712-11	METAL CHIP	6.8K	0.5%	1/10W
R2632	1-218-702-11	METAL CHIP	2.7K	0.5%	1/10W
R2633	1-216-804-11	METAL CHIP	39	5%	1/10W
R2634	1-216-804-11	METAL CHIP	39	5%	1/10W
R2635	1-218-867-11	METAL CHIP	6.8K	0.5%	1/10W
R2636	1-218-871-11	METAL CHIP	10K	0.5%	1/10W
R2638	1-218-863-11	METAL CHIP	4.7K	0.5%	1/10W
R2642	1-216-797-11	METAL CHIP	10	5%	1/10W
R2644	1-216-825-11	METAL CHIP	2.2K	5%	1/10W
R2646	1-216-825-11	METAL CHIP	2.2K	5%	1/10W
R2649	1-216-789-11	METAL CHIP	2.2	5%	1/10W
R2650	1-216-789-11	METAL CHIP	2.2	5%	1/10W
R2656	1-216-797-11	METAL CHIP	10	5%	1/10W
R2701	1-216-833-11	METAL CHIP	10K	5%	1/10W
R2702	1-216-864-11	SHORT CHIP	0		

REF.NO.	PART.NO	DESCRIPTION			REMARK
R2703	1-216-833-11	METAL CHIP	10K	5%	1/10W
R2704	1-216-805-11	METAL CHIP	47	5%	1/10W
R2705	1-216-805-11	METAL CHIP	47	5%	1/10W
R2706	1-216-864-11	SHORT CHIP	0		
R2707	1-216-864-11	SHORT CHIP	0		
R2709	1-216-864-11	SHORT CHIP	0		
R2710	1-216-864-11	SHORT CHIP	0		
R2711	1-216-864-11	SHORT CHIP	0		
R2712	1-218-877-11	METAL CHIP	18K	0.5%	1/10W
R2713	1-218-861-11	METAL CHIP	3.9K	0.5%	1/10W
R2715	1-218-863-11	METAL CHIP	4.7K	0.5%	1/10W
R2716	1-218-863-11	METAL CHIP	4.7K	0.5%	1/10W
R2717	1-218-853-11	METAL CHIP	1.8K	0.5%	1/10W
R2718	1-216-864-11	SHORT CHIP	0		
R2719	1-216-864-11	SHORT CHIP	0		
R2722	1-216-833-11	METAL CHIP	10K	5%	1/10W
R2723	1-216-864-11	SHORT CHIP	0		
R2724	1-216-864-11	SHORT CHIP	0		
R2725	1-216-864-11	SHORT CHIP	0		
R2728	1-216-804-11	METAL CHIP	39	5%	1/10W
R2729	1-216-804-11	METAL CHIP	39	5%	1/10W
R2730	1-218-712-11	METAL CHIP	6.8K	0.5%	1/10W
R2732	1-218-702-11	METAL CHIP	2.7K	0.5%	1/10W
R2733	1-218-867-11	METAL CHIP	6.8K	0.5%	1/10W
R2740	1-216-797-11	METAL CHIP	10	5%	1/10W
R2742	1-216-825-11	METAL CHIP	2.2K	5%	1/10W
R2744	1-216-825-11	METAL CHIP	2.2K	5%	1/10W
R2747	1-216-789-11	METAL CHIP	2.2	5%	1/10W
R2748	1-216-789-11	METAL CHIP	2.2	5%	1/10W
R2750	1-216-797-11	METAL CHIP	10	5%	1/10W
R2751	1-216-813-11	METAL CHIP	220	5%	1/10W
R2801	1-218-871-11	METAL CHIP	10K	0.5%	1/10W
R2802	1-218-847-11	METAL CHIP	1K	0.5%	1/10W
R2803	1-216-864-11	SHORT CHIP	0		
R3006	1-216-833-11	METAL CHIP	10K	5%	1/10W
R3007	1-216-833-11	METAL CHIP	10K	5%	1/10W
R3008	1-216-809-11	METAL CHIP	100	5%	1/10W
R3009	1-216-809-11	METAL CHIP	100	5%	1/10W
R3010	1-216-864-11	SHORT CHIP	0		
R3011	1-216-864-11	SHORT CHIP	0		
R3012	1-216-864-11	SHORT CHIP	0		
R3018	1-216-809-11	METAL CHIP	100	5%	1/10W
R3020	1-216-864-11	SHORT CHIP	0		
R3021	1-216-864-11	SHORT CHIP	0		
R3023	1-216-829-11	METAL CHIP	4.7K	5%	1/10W
R3024	1-216-829-11	METAL CHIP	4.7K	5%	1/10W
R3025	1-216-864-11	SHORT CHIP	0		
R3028	1-218-867-11	METAL CHIP	6.8K	0.5%	1/10W
R3029	1-216-833-11	METAL CHIP	10K	5%	1/10W
R3031	1-216-809-11	METAL CHIP	100	5%	1/10W
R3032	1-216-809-11	METAL CHIP	100	5%	1/10W
R3033	1-216-809-11	METAL CHIP	100	5%	1/10W
R3039	1-216-809-11	METAL CHIP	100	5%	1/10W
R3040	1-216-809-11	METAL CHIP	100	5%	1/10W
R3041	1-216-821-91	RES CHIP	1K	5%	1/10W
R3042	1-216-829-11	METAL CHIP	4.7K	5%	1/10W
R3043	1-216-864-11	SHORT CHIP	0		
R3044	1-216-864-11	SHORT CHIP	0		
R3045	1-216-864-11	SHORT CHIP	0		
R3046	1-216-864-11	SHORT CHIP	0		
R3047	1-216-864-11	SHORT CHIP	0		
R3048	1-216-864-11	SHORT CHIP	0		
R3049	1-216-864-11	SHORT CHIP	0		
R3051	1-216-857-11	METAL CHIP	1M	5%	1/10W
R3052	1-216-864-11	SHORT CHIP	0		
R3053	1-216-864-11	SHORT CHIP	0		
R3054	1-216-864-11	SHORT CHIP	0		
R3055	1-216-864-11	SHORT CHIP	0		
R3058	1-218-847-11	METAL CHIP	1K	0.5%	1/10W
R3060	1-216-864-11	SHORT CHIP	0		
R3062	1-218-823-11	METAL CHIP	100	0.5%	1/10W
R3063	1-216-864-11	SHORT CHIP	0		
R3066	1-216-864-11	SHORT CHIP	0		
R3067	1-216-864-11	SHORT CHIP	0		
R3068	1-216-821-11	METAL CHIP	1K	5%	1/10W
R3070	1-216-821-11	METAL CHIP	1K	5%	1/10W
R3072	1-216-825-11	METAL CHIP	2.2K	5%	1/10W
R3074	1-216-864-11	SHORT CHIP	0		
R3075	1-216-855-11	METAL CHIP	680K	5%	1/10W
R3076	1-218-835-11	METAL CHIP	330	0.5%	1/10W
R3077	1-218-835-11	METAL CHIP	330	0.5%	1/10W
R3079	1-216-855-11	METAL CHIP	680K	5%	1/10W
R3080	1-216-820-11	METAL CHIP	820	5%	1/10W
R3082	1-216-864-11	SHORT CHIP	0		
R3101	1-216-841-11	METAL CHIP	47K	5%	1/10W
R3102	1-216-819-11	METAL CHIP	680	5%	1/10W
R3104	1-216-833-11	METAL CHIP	10K	5%	1/10W
R3106	1-216-833-11	METAL CHIP	10K	5%	1/10W
R3107	1-216-805-11	METAL CHIP	47	5%	1/10W
R3109	1-216-833-11	METAL CHIP	10K	5%	1/10W
R3110	1-216-833-11	METAL CHIP	10K	5%	1/10W
R3111	1-216-805-11	METAL CHIP	47	5%	1/10W
R3113	1-216-833-11	METAL CHIP	10K	5%	1/10W
R3118	1-216-833-11	METAL CHIP	10K	5%	1/10W
R3119	1-216-833-11	METAL CHIP	10K	5%	1/10W
R3120	1-216-833-11	METAL CHIP	10K	5%	1/10W
R3121	1-216-864-11	SHORT CHIP	0		
R3122	1-216-864-11	SHORT CHIP	0		
R3123	1-216-864-11	SHORT CHIP	0		
R3124	1-216-864-11	SHORT CHIP	0		

REF.NO.	PART.NO	DESCRIPTION			REMARK
R3125	1-216-864-11	SHORT CHIP	0		
R3126	1-216-833-11	METAL CHIP	10K	5%	1/10W
R3127	1-216-864-11	SHORT CHIP	0		
R3128	1-216-833-11	METAL CHIP	10K	5%	1/10W
R3129	1-216-833-11	METAL CHIP	10K	5%	1/10W
R3130	1-216-833-11	METAL CHIP	10K	5%	1/10W
R3131	1-216-833-11	METAL CHIP	10K	5%	1/10W
R3132	1-216-864-11	SHORT CHIP	0		
R3133	1-216-864-11	SHORT CHIP	0		
R3134	1-216-864-11	SHORT CHIP	0		
R3135	1-216-864-11	SHORT CHIP	0		
R3136	1-216-864-11	SHORT CHIP	0		
R3137	1-216-864-11	SHORT CHIP	0		
R3138	1-216-864-11	SHORT CHIP	0		
R3139	1-216-864-11	SHORT CHIP	0		
R3140	1-216-864-11	SHORT CHIP	0		
R3141	1-216-864-11	SHORT CHIP	0		
R3142	1-216-864-11	SHORT CHIP	0		
R3143	1-216-864-11	SHORT CHIP	0		
R3144	1-216-864-11	SHORT CHIP	0		
R3145	1-216-805-11	METAL CHIP	47	5%	1/10W
R3146	1-216-805-11	METAL CHIP	47	5%	1/10W
R3147	1-216-801-11	METAL CHIP	22	5%	1/10W
R3148	1-216-801-11	METAL CHIP	22	5%	1/10W
R3149	1-216-864-11	SHORT CHIP	0		
R3150	1-216-807-11	METAL CHIP	68	5%	1/10W
R3151	1-216-801-11	METAL CHIP	22	5%	1/10W
R3152	1-216-807-11	METAL CHIP	68	5%	1/10W
R3153	1-216-801-11	METAL CHIP	22	5%	1/10W
R3154	1-216-807-11	METAL CHIP	68	5%	1/10W
R3155	1-216-807-11	METAL CHIP	68	5%	1/10W
R3171	1-216-864-11	SHORT CHIP	0		
R3176	1-216-829-11	METAL CHIP	4.7K	5%	1/10W
R4001	1-216-864-11	SHORT CHIP	0		
R4002	1-216-864-11	SHORT CHIP	0		
R4003	1-216-864-11	SHORT CHIP	0		
R4004	1-216-864-11	SHORT CHIP	0		
R4005	1-216-864-11	SHORT CHIP	0		
R4006	1-218-732-11	METAL CHIP	47K	0.5%	1/10W
R4007	1-218-732-11	METAL CHIP	47K	0.5%	1/10W
R4008	1-216-841-11	METAL CHIP	47K	5%	1/10W
R4009	1-216-864-11	SHORT CHIP	0		
R4010	1-216-864-11	SHORT CHIP	0		
R4011	1-216-864-11	SHORT CHIP	0		
R4012	1-216-841-11	METAL CHIP	47K	5%	1/10W
R4013	1-218-732-11	METAL CHIP	47K	0.5%	1/10W
R4014	1-216-864-11	SHORT CHIP	0		
R4015	1-216-864-11	SHORT CHIP	0		
R4016	1-216-864-11	SHORT CHIP	0		
R4018	1-216-864-11	SHORT CHIP	0		
R4019	1-218-732-11	METAL CHIP	47K	0.5%	1/10W
R4020	1-218-732-11	METAL CHIP	47K	0.5%	1/10W
R4021	1-218-732-11	METAL CHIP	47K	0.5%	1/10W
R4022	1-216-814-11	METAL CHIP	270	5%	1/10W
R4023	1-216-809-11	METAL CHIP	100	5%	1/10W
R4024	1-216-814-11	METAL CHIP	270	5%	1/10W
R4025	1-216-814-11	METAL CHIP	270	5%	1/10W
R4026	1-216-864-11	SHORT CHIP	0		
R4027	1-216-809-11	METAL CHIP	100	5%	1/10W
R4028	1-216-864-11	SHORT CHIP	0		
R4029	1-216-864-11	SHORT CHIP	0		
R4030	1-216-864-11	SHORT CHIP	0		
R4031	1-216-864-11	SHORT CHIP	0		
R4032	1-216-833-11	METAL CHIP	10K	5%	1/10W
R4033	1-216-864-11	SHORT CHIP	0		
R4034	1-216-864-11	SHORT CHIP	0		
R4035	1-216-864-11	SHORT CHIP	0		
R4036	1-216-814-11	METAL CHIP	270	5%	1/10W
R4039	1-216-864-11	SHORT CHIP	0		
R4040	1-216-814-11	METAL CHIP	270	5%	1/10W
R4042	1-216-864-11	SHORT CHIP	0		
R4043	1-216-814-11	METAL CHIP	270	5%	1/10W
R4044	1-216-809-11	METAL CHIP	100	5%	1/10W
R4046	1-216-849-11	METAL CHIP	220K	5%	1/10W
R4047	1-216-805-11	METAL CHIP	47	5%	1/10W
R4048	1-216-833-11	METAL CHIP	10K	5%	1/10W
R4049	1-216-821-11	METAL CHIP	1K	5%	1/10W
R4050	1-218-732-11	METAL CHIP	47K	0.5%	1/10W
R4051	1-218-732-11	METAL CHIP	47K	0.5%	1/10W
R4052	1-216-841-11	METAL CHIP	47K	5%	1/10W
R4053	1-216-841-11	METAL CHIP	47K	5%	1/10W
R4054	1-216-841-11	METAL CHIP	47K	5%	1/10W
R4055	1-216-841-11	METAL CHIP	47K	5%	1/10W
R4056	1-216-841-11	METAL CHIP	47K	5%	1/10W
R4057	1-216-841-11	METAL CHIP	47K	5%	1/10W
R4058	1-216-821-11	METAL CHIP	1K	5%	1/10W
R4059	1-216-833-11	METAL CHIP	10K	5%	1/10W
R4060	1-216-817-11	METAL CHIP	470	5%	1/10W
R4061	1-216-864-11	SHORT CHIP	0		
R4062	1-216-864-11	SHORT CHIP	0		
R4065	1-216-833-11	METAL CHIP	10K	5%	1/10W
R4066	1-216-864-11	SHORT CHIP	0		
R4067	1-216-864-11	SHORT CHIP	0		
R4068	1-216-864-11	SHORT CHIP	0		
R4069	1-216-864-11	SHORT CHIP	0		

< RESISTOR CHIP >

RB2013	1-233-796-11	RES, NETWORK	(1608)
RB2501	1-233-574-11	RES, CHIP NETWORK 10	
RB2502	1-233-574-11	RES, CHIP NETWORK 10	

Note : The components identified by shading and marked ⚠ are critical for safety. Replace only with the part numbers specified in the parts list.

C

REF.NO.	PART.NO	DESCRIPTION	REMARK
RB2503	1-233-574-11	RES, CHIP NETWORK 10	
RB2553	1-233-782-91	RES, NETWORK 10	(1608)
RB2601	1-233-782-91	RES, NETWORK 10	(1608)
RB2602	1-233-574-11	RES, CHIP NETWORK 10	
RB2603	1-233-574-11	RES, CHIP NETWORK 10	
RB2604	1-233-574-11	RES, CHIP NETWORK 10	
RB2653	1-233-782-91	RES, NETWORK 10	(1608)
RB2701	1-233-574-11	RES, CHIP NETWORK 10	
RB2702	1-233-574-11	RES, CHIP NETWORK 10	
RB2703	1-233-574-11	RES, CHIP NETWORK 10	
RB3002	1-234-370-21	RES, NETWORK 22X4	(1005)
RB3006	1-234-370-21	RES, NETWORK 22X4	(1005)
RB3007	1-234-370-21	RES, NETWORK 22X4	(1005)
RB3008	1-234-370-21	RES, NETWORK 22X4	(1005)
RB3009	1-234-370-21	RES, NETWORK 22X4	(1005)
RB3010	1-234-370-21	RES, NETWORK 22X4	(1005)
RB3102	1-233-784-91	RES, NETWORK 47	(1608)
RB3104	1-233-789-11	RES, NETWORK 10K	(1608)
RB3105	1-234-372-21	RES, NETWORK 100X4	(1005)
RB3106	1-233-785-91	RES, NETWORK 100	(1608)
RB3107	1-234-372-21	RES, NETWORK 100X4	(1005)
RB3108	1-233-785-91	RES, NETWORK 100	(1608)
RB3109	1-234-370-21	RES, NETWORK 22X4	(1005)
RB3110	1-234-370-21	RES, NETWORK 22X4	(1005)
RB3111	1-234-372-21	RES, NETWORK 100X4	(1005)
RB3112	1-233-785-91	RES, NETWORK 100	(1608)
RB3113	1-234-372-21	RES, NETWORK 100X4	(1005)
RB3114	1-234-372-21	RES, NETWORK 100X4	(1005)
RB3115	1-234-372-21	RES, NETWORK 100X4	(1005)
RB4000	1-234-372-21	RES, NETWORK 100X4	(1005)
RB4001	1-234-372-21	RES, NETWORK 100X4	(1005)
RB4002	1-234-372-21	RES, NETWORK 100X4	(1005)
RB4003	1-234-372-21	RES, NETWORK 100X4	(1005)
TP2012	1-535-757-11	CHIP, CHECKER	
TP2013	1-535-757-11	CHIP, CHECKER	
TP2014	1-535-757-11	CHIP, CHECKER	
TP2015	1-535-757-11	CHIP, CHECKER	
TP2016	1-535-757-11	CHIP, CHECKER	
TP2017	1-535-757-11	CHIP, CHECKER	
TP2018	1-535-757-11	CHIP, CHECKER	
TP2019	1-535-757-11	CHIP, CHECKER	
TP2020	1-535-757-11	CHIP, CHECKER	
TP2021	1-535-757-11	CHIP, CHECKER	
TP2024	1-535-757-11	CHIP, CHECKER	
TP2025	1-535-757-11	CHIP, CHECKER	
		< CRYSTAL >	
X3001	1-781-109-21	VIBRATOR, CRYSTAL	
X4000	1-781-109-21	VIBRATOR, CRYSTAL	

MISCELLANEOUS

	1-825-580-11	LOUDSPEAKER (10CM)
	1-544-857-11	SPEAKER (13X7CM)
	1-419-965-11	COIL, CHOKE 27.0MMH
⚠	1-765-286-11	CORD, POWER (KF-50SX300K/KF50SX300AEP/ KF-60SX300K/KF-60SX300AEP)
⚠	1-776-860-11	POWER CORD, FILTER(UK) (KF-50SX300U/ KF-60SX300U)
	1-787-057-11	D.C.FAN
	1-418-257-11	FAN UNIT, DC
	8-598-535-20	FRONTEND BTF-EF411
⚠	1-468-798-11	POWER SUPPLY BLOCK

ACCESSORIES AND PACKAGING MATERIALS

*4-055-672-01	BAG, PROTECTION
*4-087-938-01	JOINT
*4-096-845-01	INDIVIDUAL CARTON
*4-096-846-01	CUSHION UPPER ASSY
*4-096-847-01	CUSHION LOWER ASSY
*4-096-848-01	TRAY
*4-099-708-01	TOP BOARD
*4-099-709-01	BOTTOM BOARD
X-404-937-01	PACKING ASSY REAR COVER (50)
X-096-824-01	SHEET, POLYTHENE
X-096-825-01	TOP, COVER
X-096-826-01	BASE TRAY
X-096-827-01	CARTON, SUB
X-096-824-01	HOLDER
4-096-858-11	INSTRUCTION MANUAL
4-096-858-11	INSTRUCTION MANUAL(ENGLISH/GERMAN/FRENCH/ ITALIAN/DUTCH/TURKISH)
4-096-858-21	INSTRUCTION MANUAL(DANISH/SPANISH/FINNISH/ NORWEGIAN/PORTUGESE/SWEDISH)
4-096-858-31	INSTRUCTION MANUAL(ENGLISH)
4-096-858-41	INSTRUCTION MANUAL(ENGLISH/BULGARIAN/CZECH/ HUNGARIAN/POLISH/RUSSIAN)

REMOTE COMMANDER

1-478-285-11	REMOTE COMMANDER (RM-906)

TRACE

A new TV Repair Assistance Tool that combines ease of use and powerful PC software tools to allow you to save valuable time during many TV repairs.

The TRACE interface connects to the PC's serial port. It provides connection to the TV's I^2C bus and can be provided with an InfraRed transmitter (optional).

The interface is powered by a standard 9 V PP3 battery for portable use, and can also be powered by an external 9V/25mA DC power supply.

The TRACE software that is supplied with the interface allows you to:

- Read, restore and compare NVM contents via the I^2C bus
- Acknowledge check of all I^2C devices in the TV set
- Read Error Codes (emulation of the Error Reader tool)

With the optional IR Add-on kit, the following features can be added:

- Remote Commander emulation
- User programmable Functional Check through Infrared
- Fast and documented Test Mode setting of all Sony TV chassis

Additional features such as Adjustments and Troubleshooting are available in chassis-dependent software modules. Please contact your local Sony Service organisation for the latest information.

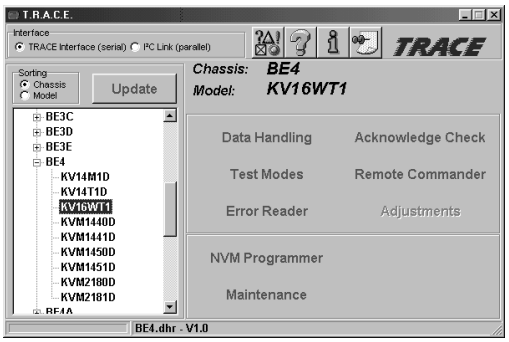

Note: For workshops already using the existing I^2C Link parallel port interface (9-948-320-30), this software can be used as well, replacing the TV Data Handling software (9-948-340-50), but Error Reader and IR functions can only be accessed with the TRACE interface.

Partnumbers:

TRACE Starter Kit (TRACE interface + software):	9-948-320-70
TRACE Software (for users of the I^2C Link interface):	9-948-340-80
TRACE IR Add-on (IR interface + Remote Commander software):	9-948-320-80

PC requirements: IBM-compatible PC with operating system Windows95, Windows98, or WindowsNT*.

* WindowsNT only supported with TRACE interface

9-927-461-01

Sony Corporation
Sony UK
Service Promotions Dept.

English
03JP7100-1
Printed in U.K.

© 2003.10